TCD-D100

SERVICE MANUAL

US Model
Canadian Model
AEP Model
Australian Model
Tourist Model

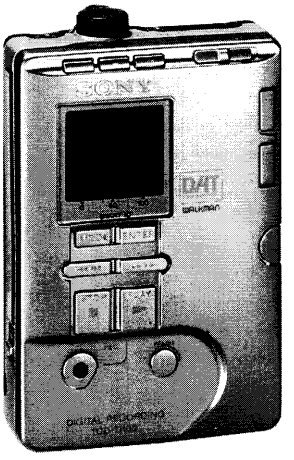

DAT
Digital Audio Tape

WALKMAN

Model Name Using Similar Mechanism	NEW
Tape Transport Mechanism Type	MT-D100-128

SPECIFICATIONS

TAPE	Digital audio tape
Recording time	Standard: 120minutes Long-play mode: 240minutes (with DT-120)
Sampling frequency	48kHz, 44.1kHz, 32kHz
Quantization	Standard: 16-bit linear Long-play mode: 12-bit non linear
Frequency response	Standard: Fs 48kHz 20-22,000Hz (±1.0dB) (LINE IN) Fs 44.1kHz 20-20,000Hz (±1.0dB) (LINE IN) Fs 32kHz 20-14,500Hz (±1.0dB) (LINE IN) Long-play mode: Fs32kHz 20-14,500Hz (±1.0dB) (LINE IN)
Signal to noise ratio	Standard: more than 87dB Long-play mode: more than 87dB (1kHz IHF-A, LINE IN)
Dynamic range	Standard: more than 87dB Long-play mode: more than 87dB (1kHz IHF-A, LINE IN)
Total harmonic distortion	Standard: less than 0.008% (1kHz, 22kHz LPF, LINE IN) Long-play mode: less than 0.09% (1kHz, 22kHz LPF, LINE IN)
Wow and flutter	Below measurable limit (less than ±0.001% W.PEAK)

Input

	Jack type	Impedance	Rated input level	Minimum input level
MIC/ LINE IN	stereo minijack	MIC 4.7kΩ LINE IN 47kΩ	MIC 1.4mV LINE IN 500mV	MIC 0.3mV LINE IN 120mV

Output

	Jack type	Impedance	Rated output	Minimum output level	Load impedance
LINE OUT	stereo minijack	220Ω	500mV	–	LINE OUT 10kΩ
REMOTE /Ω		16Ω	87mV	15mW+15mW	PHONES16Ω

Input/Output	DIGITAL I/O REMOTE jack (special jack) Digital input/ output, remote control operation and timer-activated operation is possible by connection with an adaptor kit to this jack.
Power requirements	• Two R6 (size AA) alkaline batteries (not supplied) • Two nickel metal hydride rechargeable battery DC IN 4.5V jack accepts: the Sony AC power adaptor AC-E45HG the car battery cord DCC-E245 (not supplied) for use with 12V/24V car battery.
Battery life	See "Replacing the batteries" (page 34).
Power consumption	0.9W
Dimension	Approx. 80x29.2x117.3mm ($3^1/_4$ x $1^1/_2$ x $3^1/_2$ in) (w/h/d) not incl. projecting parts and controls
Mass	Main unit: Approx. 290g (10.3oz) When using the main unit: Approx. 395g (14oz.) incl.headphones with remote control, rechargeable batteries and a cassette

Supplied accessories
- AC power adaptor AC-E45HG (1) Tourist Model:AC-E45AM
- Charger adaptor BC-D100 (1)
- Nickel Metal Hydride Rechargeable battery NH-D100 (2)
- Headphones with a remote control (1) RM-ED100, MDR-E747
- DAT cleaning cassette (1)
- Carrying case (1)

DIGITAL AUDIO TAPE RECORDER

MICROFILM

SONY®

TABLE OF CONTENTS

SECTION 1
GENERAL

This section is extracted from instruction manual.

Location and Function of Controls

Refer to the pages in ( ) for details.

Main unit —front side

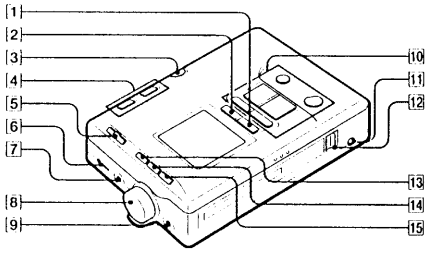

[1] START ID•MODE button

[2] START ID•ENTER button

[3] LIGHT button
Press to illuminate the display when using the tape-corder in the dark.

[4] VOLUME +/– buttons (19)

[5] HOLD switch (12, 14, 19, 35)
Hold function does not lock the CLOCK/SET, COUNTER/–, RESET/+ buttons (except for the low-power consumption mode).
Slide the switch to HOLD in the stop mode to enter the low-power consumption mode.

[6] REMOTE/Ω (headphones) jack (19, 24, 31)

[7] LINE OUT (line output) jack (25, 30)

[8] REC LEVEL (recording level) control (24)

[9] MIC/LINE IN (microphone/line input) jack (15, 22, 24)

[10] Tape operation buttons: (17)
⏮ ◀◀ (rewind/review • AMS) button
■ STOP button
▶ PLAY button
▶▶ ⏭ (fast-forward/cue • AMS) button
● REC (record) button
❚❚ PAUSE button

[11] DC IN 4.5V (external power input) jack (36)

[12] OPEN switch (13)

[13] RESET/+ button (9, 38)

[14] COUNTER/– button (9)

[15] CLOCK/SET button (10, 12)

Location and Function of Controls

Location and Function of Controls (continued)

Main unit —back side

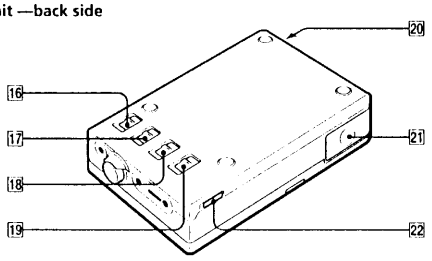

[16] MIC ATT (microphone sensitivity) switch (16)

[17] MIC/LINE IN (microphone/line input) switch (16, 22)

[18] MANUAL•MIC LIMITER•AUTO (AGC) selector (16, 22)

[19] SP•LP (standard play/long play mode select) switch (16, 23, 24)

[20] REMOTE•DIGITAL I/O (input/output) jack (23, 30, 37)
Connect equipment with digital input/output using the connecting cable POC-DA12P/DA12MP/DA12SP or RK-DA10P (not supplied), the adaptor kit RM-D100K, the remote control RMT-D100, or the super bit mapping adaptor SBM-1, etc.

[21] Battery compartment lid (11)

[22] AVLS (automatic volume limiter system) switch (31)

Headphones with Remote Control

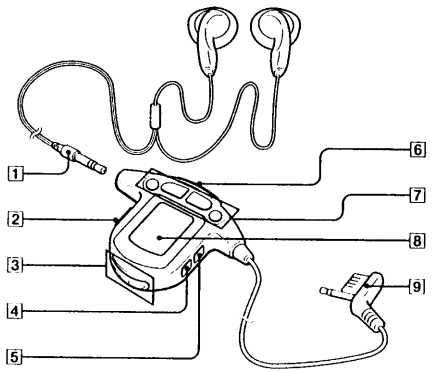

[1] Stereo mini plug

[2] COUNTER MODE button (9)

[3] VOL +/– (volume) button (19)

[4] CLOCK button (10)

[5] AVLS button (31)

[6] HOLD switch (12, 14, 19, 35)
When you slide it to the direction of the arrow, the buttons on the remote control will be locked. But the COUNTER MODE, CLOCK and the AVLS buttons will operate.

[7] TAPE operating buttons (17)
⏭ (Fast forward/cue•AMS) button
▶ (play) button
■ (stop) button
⏮ (Rewind/review•AMS) button

[8] Display

[9] Remote plug

Location and Function of Controls

Location and Function of Controls (continued)

Display

Main unit

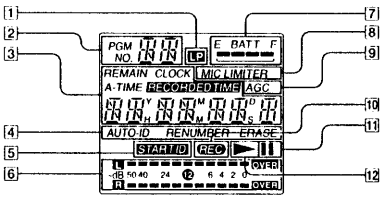

[1] LP (Long Play) mode indicator (16, 25)

[2] PGM.NO (program number)•day •AM/PM indicator (12, 20)

[3] Tape counter/clock/volume/message indicator (9, 10, 39)

[4] START ID (automatic Start ID•renumber•erase signal) indicator (26)

[5] START ID indicator (26)

[6] Peak level indicator (24)

[7] BATT (remaining battery power status) indicator (34)

[8] MIC LIMITER indicator

[9] AGC indicator

[10] REC (recording) indicator

[11] ❚❚ (pause) indicator

[12] ▶ (playback) indicator

Remote control

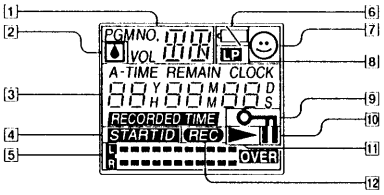

[1] PGM.NO (program number)•day•AM/PM•volume indicator

[2] Moisture condensation indicator

[3] Tape counter/clock indicator

[4] START ID indicator

[5] Peak level indicator

[6] ⌫ (battery power status) indicator

[7] AVLS indicator

[8] LP (Long Play) mode indicator

[9] HOLD indicator

[10] ❚❚ (pause) indicator

[11] ▶ (playback) indicator

[12] REC (recording) indicator

Using the display

Main unit

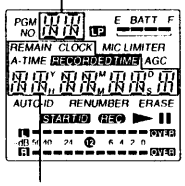

Remote control

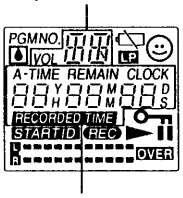

Tape counter display

Each time the COUNTER button is pressed (on the remote control, the COUNTER MODE button), the display changes as follows:

Example: indication on the main unit

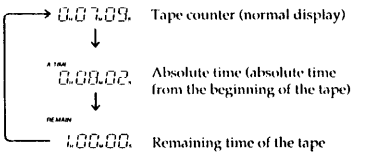

Note

The tape counter is provided as a visual guideline and is not a clock. The value displayed in the counter is not an accurate depiction of the actual time. Therefore, do not use the tape counter as a clock.

To reset the tape counter (normal display) to "0H00M00S"

Press the RESET button on the main unit when the tape counter is displayed.

Remaining time of the tape

The remaining time of the tape appears normally after about 16 seconds of commencing playback in the SP mode. However, there may be a deviation in the amount of time displayed depending on the tape.

* The RECORDED TIME is displayed while playing back only.

Note

When the tape-corder enters the recording, recording monitor, or pause mode while RECORDED TIME is indicated, the tape-corder displays the current time.

Message display

Refer to page 39 for "Message Display".

Clock display

Each time the CLOCK/SET button is pressed (on the remote control, the CLOCK button), the display changes as follows:

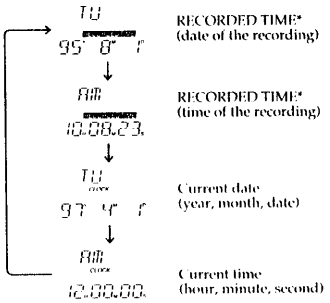

Inserting the Batteries

Use two LR6 (size AA) alkaline batteries.

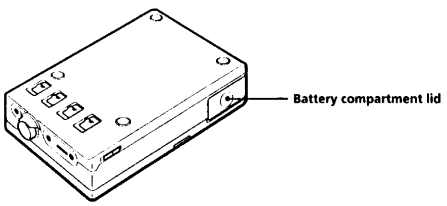

You may also use the rechargeable battery or the house current. For more details see "Power Sources", page 32.

1

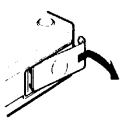

Open the battery compartment lid.

2

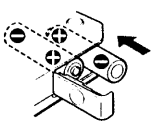

Insert two new alkaline batteries (not supplied) into the battery holder. Make sure to insert them with correct polarity.

3

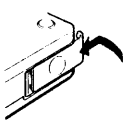

Close the compartment lid.

Setting the Clock

Set the clock before starting any recording operations to stamp the date and time. Otherwise, you cannot get the correct date and time.

The clock will return to its default setting (TU/97Y4M1D/AM12H00M00S) if the batteries are removed from the unit for a long time. In this case, set the clock again.

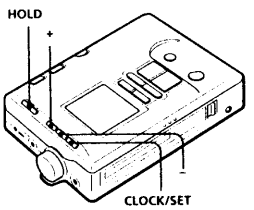

Make sure that the tape-corder is in the stop mode and that the HOLD function is off.

1

Press the CLOCK/SET button for more than four seconds.

2

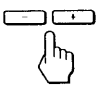

Press + or – button to set the current year, then press the CLOCK/SET button.

3

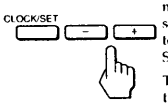

Repeat step 2 to set the current month, date, hour, minute. For seconds, pressing + or – will set it to "00". Then press the CLOCK/SET button.

The display stops flashing and the clock operates.

Tip

To set the clock accurately, set the second to 00 with the + or – button, and then press the CLOCK/SET button at the time of the tone.

To select either the 12-hour or 24-hour clock display

Press the + button for 2 seconds or more.

To quit the clock setting

Press the ■ STOP button. The clock display will return to the previous clock setting. However, if the date is set, the year, month and date will be set and will not be applicable for further cancellation.

Inserting the Cassette

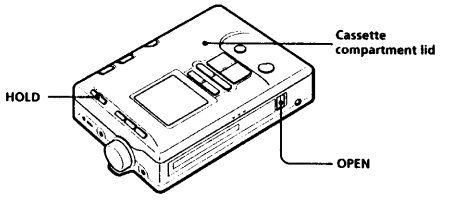

Make sure that the HOLD function is off.

1

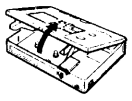

Open the cassette compartment lid.
① Slide the OPEN switch.
② Open the cassette compartment lid when it opens slightly.

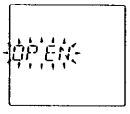

2

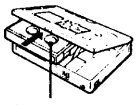

Window facing up.

Insert the cassette.

Insert the cassette with the window facing up. If the cassette is inserted upside down, it may not be removed from the unit.

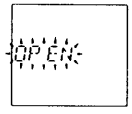

3

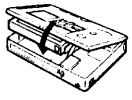

Close the lid.

The cassette is loaded automatically.

Notes

- The cassette holder will not open if HOLD is locked. Release HOLD to insert a cassette.
- When inserting or taking out a cassette, do not hold the cassette as shown below. This may lead to a malfunction.

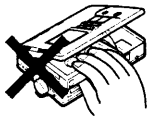

- Make sure that the cassette compartment lid is closed and "UNLOAD" or "LOAD" is not displayed before disconnecting the power source. Otherwise, the cassette compartment lid may not close. In this case, connect the power source again.

Tip

While the tape-corder is in the stop mode, slide the HOLD switch on the main unit to HOLD to enter the low-power consumption mode manually when using the unit on batteries. (See page 34.)

- You can set the display, clock or AVLS.

To eject the cassette

While the tape-corder is in the stop mode, slide the OPEN switch.

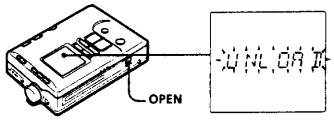

To protect your recording

Slide open the record-protect shutter to record-protect your tape.

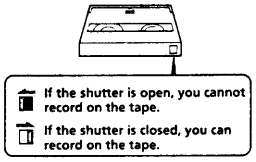

Notes on DAT cassettes

- Unlike conventional analog cassettes, playback and recording are applicable on one side of the cassette only.
- Under normal usage, the construction of the DAT cassette prevents undesirable entry of dust and foreign particles. Do not open the DAT cassette unnecessarily.
- Do not insert items into the holes on the reverse side of the DAT cassette.

To prevent accidental operations — HOLD function

Main unit: Slide the HOLD switch until the yellow hold mark shows. When a button is pressed in the HOLD mode, "HOLD" will flash for 3 seconds in the display and the buttons will be locked*.

Remote control: Slide HOLD switch in the direction of the arrow. "⊶" will light up in the display and the buttons will be locked.

Recording

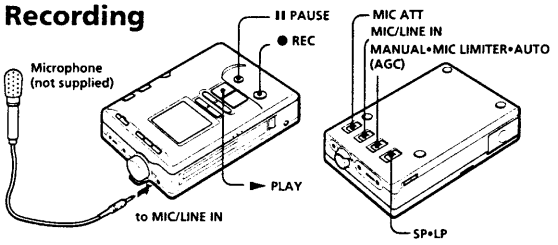

Refer to page 22 for "Connecting with Other Equipment for Recording".

Note

The absolute time may not be written correctly in the following cases.

- When recording on a partially recorded tape containing an unrecorded segment (i.e., a portion of the tape that has never been recorded).
- When recording on a partially recorded tape for which the absolute time has not been written originally.

Note

Do not press the ■ STOP button when "blank" is displayed. If it is pressed, the absolute time will become "--H--M--S" and will not be written thereafter.

Locating the point at which to begin recording

The absolute time is automatically written simultaneously while recording.

The absolute time is indicated as the length of time from the beginning of the tape, and is useful in determining the elapsed time from the beginning of the tape. If you wish to continue to record on a partially recorded tape, make sure that you initially locate the end of the previous recording prior to resuming recording from that point to avoid leaving any unrecorded segment unnecessarily. Once the absolute time is written, it cannot be erased.

If you wish to insert a four-second blank segment automatically, refer to page 25 for "Recording blank segment—REC MUTE".

To record from the beginning of the tape

Press the ⏮ ◀◀ button to rewind the tape. "TOP" flashes when the tape is rewound to the beginning.

To record on a partially recorded tape

Press the ▶▶ ⏭ button to locate the end of the previous recording. "blank" appears when the end of the previous recording is located, and the tape stops at the point.

When "— —" flashes for the program number

"— —" indicates an unrecorded segment. Press the ⏮ ◀◀ button to rewind the tape until "— —" stops flashing. Then, press the ▶▶ ⏭ button to locate the end of the previous recording.

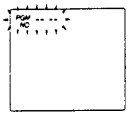

Recording from a microphone

1

Insert a cassette and locate the point at which to begin recording.

2

Set the MIC/LINE IN switch to MIC.

3

Set the MIC ATT switch.

0 dB: Normal
20 dB: For loud sound

4

Set the MANUAL•MIC LIMITER•AUTO (AGC) selector to AUTO (AGC).
The tape-corder adjusts the recording level automatically.

To adjust the recording level manually, set the selector to MANUAL or MIC LIMITER. (See page 24.)

5

Select the sampling frequency.

Set the SP•LP switch to SP (Standard Play mode 48 kHz or 44.1 kHz).

To record in the Long Play mode, set the switch to LP. (See page 25.)

6

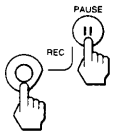

Press the ● REC and ❚❚ PAUSE buttons.

The tape-corder enters the pause mode. If only the ● REC button is pressed, the tape-corder enters the recording monitor mode (see page 25) and does not begin recording.

7

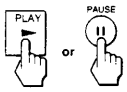

Press either the ► PLAY or ❚❚ PAUSE button.

The recording begins.

Tips

- To begin recording immediately, press the ► PLAY button while pressing the ● REC button in the stop or playback mode.
- The sampling frequency is displayed when the sampling frequency is changed during recording and recording pause.
- If the tape-corder remains in the pause mode for five minutes or longer, the tape-corder will enter the stop mode automatically in order to protect the head and tape.
- If the tape-corder remains in the stop mode for three minutes or longer while using the unit on batteries, the tape-corder will enter the low-power consumption mode automatically (see page 35) to protect the tape and to conserve the battery.

Other operations

To	Press
Stop recording	■ STOP
Pause recording	❚❚ PAUSE
Release pause	❚❚ PAUSE or ► PLAY
Check the input source: in the recording mode in the recording monitor mode in the recording pause mode	● REC Press the button until the input source display appears. MIC in
Check the sampling frequency	► PLAY in the recording mode until the sampling frequency is displayed. F 48 ►

Tip

- When the tape-corder records to the end of the tape, it rewinds the tape automatically to the beginning and stops. (Auto-rewind function).

Notes

- The unit will not enter the low-power consumption mode during the recording monitor mode, even when using the unit on batteries.
- Changing the sampling frequency while recording may cause temporary sound dropout to be recorded.
- Noise may be recorded if you set the MIC/LINE IN switch during recording.
- Noise may be recorded when the display light is turned on while recording. In this case, turn it off.
- If OVER appears when the recording mode is set to AUTO (AGC), set the MIC ATT to 20dB or move the microphone away from the sound source.

To record relatively low sounds

Lower the recording level (in the manual recording mode) and move the microphone as close as possible to the sound source and then adjust the recording level. Clear and optimum recording with minimal noise interferences will be achieved.

Choosing microphones for better recording

The recording is affected by and is dependent upon the type of microphones used. For better recording, use the optional ECM-MS957 or ECM-MS907 microphone.

Compatible microphones

- Optional plug-in power type microphones are compatible for this tape-corder.
- Optional auto power supply type microphones are not compatible for this tape-corder.

Playing Back

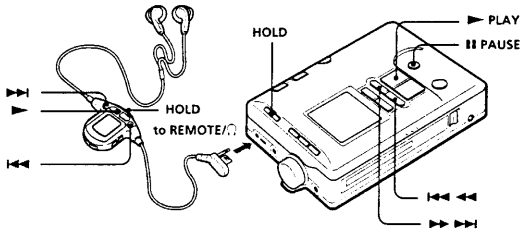

Refer to page 30 for "Connecting with Other Equipment for Playback".

1

Insert a cassette and connect the headphones with remote control.

Release the Hold function.

2

Press the ► PLAY button.

The playback begins.

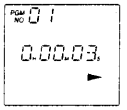

Tips

- The SP (Standard Play) mode and LP (Long Play) mode will be detected automatically for playback.
- When the tape-corder plays back to the end of the tape, it rewinds the tape automatically to the beginning and stops (Auto-rewind function).
- The pause playback cannot be operated with the remote control.

Other operations

To	Press
Adjust the volume	VOLUME +/– (VOL +/–)
Stop playback	■ STOP (■)
Pause playback	❚❚ PAUSE
Release pause	❚❚ PAUSE or ► PLAY (►)
Fast forward	►► ►►I (►►I) in the stop mode
Rewind	I◄◄ ◄◄ (I◄◄) in the stop mode

( ) is indicated for the remote control.

Tips

- If the tape-corder remains in the pause mode for five minutes or longer, the tape-corder will automatically enter the stop mode in order to protect the head and tape.
- If the tape-corder remains in the stop mode for three minutes or longer while using the unit on batteries, the tape-corder will enter the low-power consumption mode automatically (see page 35) to protect the tape and to conserve the battery.

Notes

- When you set the recording level too high, the sound may become distorted. If this happens, turn down the recording level.
- The AMS function will not operate if the Start IDs are not written. (See page 26.)
- The AMS function may not operate properly with a DAT cassette recorded on other DAT decks.

* Automatic Music Sensor

To fast-forward/rewind while monitoring the sound

You can fast-forward (cue) or rewind (review) while monitoring the sound.

Cue	Press and hold ►► ►►I (►►I) in the playback mode. When the button is released, normal playback resumes.
Review	Press and hold I◄◄ ◄◄ (I◄◄) in the playback mode. When the button is released, normal playback resumes.

( ) is indicated for the remote control.

To high speed cue/review

This function can be operated only from the main unit.

High speed cue	Press ► PLAY and ►► ►►I during playback.
High speed review	Press ► PLAY and I◄◄ ◄◄ during playback.

To locate the beginning of a track—AMS* function

You can locate the beginning of a track in the playback, fast-forward/rewind, and stop modes.

Playback mode: Press ►► ►►I (►►I) or I◄◄ ◄◄ (I◄◄) quickly.

Fast-forward/rewind mode: Press ►► ►►I (►►I) or I◄◄ ◄◄ (I◄◄) once.

Stop mode: Press ►► ►►I (►►I) or I◄◄ ◄◄ (I◄◄) twice.

To locate the beginning of the next/succeeding program (track) E.g.: When locating the beginning of the fifth succeeding program (track)	Press ►► ►►I (►►I) once/repeatedly PGM NO 03 05
To locate the beginning of the current/previous program (track) E.g.: When locating the beginning of the fourth previous track including the current program (track)	Press I◄◄ ◄◄ (I◄◄) once/repeatedly PGM NO 06 -- 03

( ) is indicated for the remote control.

To check the sampling frequency

You can check the sampling frequency of the recorded sound.

Press ► PLAY in the playback mode until the sampling frequency is displayed.

Display during fast-forward/rewind (AMS function)

Peak level indicator (L) shows the tape transport direction. Peak level indicator (R) shows the remaining amount of tape.

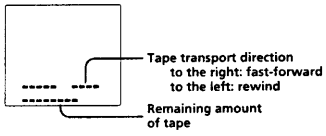

To play back the tape from the beginning automatically—Auto-play function

This function can be operated only from the main unit.

Press the ► PLAY button while pressing the ⏮ button. Playback begins automatically when the tape is rewound to the beginning.

Likewise, playback begins automatically when the tape is rewound to the beginning of the previous program (track) in the AMS function.

Connecting with Other Equipment for Recording

You can connect the tape-corder to other analog audio equipment or audio equipment with digital output. Refer to page 15 for "Recording".

Recording from analog audio equipment with a LINE OUT jack (Analog connection)

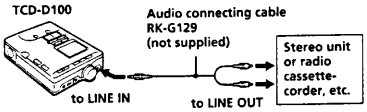

1. Set the MIC/LINE IN switch to LINE IN.
2. Select the recording mode using the MANUAL•MIC LIMITER•AUTO (AGC) selector.
   MANUAL: adjust recording level manually (see page 24)
   AUTO (AGC):recording level will be adjusted automatically (see page 16)
3. Select sampling frequency using the SP•LP switch.
   SP (48kHz, 44.1kHz): normal recording mode.
   LP: long continuous recording mode. Sampling will be done by 32kHz. (see page 25)
4. Press the ● REC and ❚❚ PAUSE buttons.
5. Press either the ► PLAY or ❚❚ PAUSE button to begin recording. Then, begin playback of the connected source.

Notes

- If "COPY PROHIBIT" is displayed, the source cannot be recorded. (See page 38)
- Use only the recommended digital cable (not supplied). (see page 47)
  You cannot use the POC-DA12/DA12M/DA12S digital connecting cables or RK-DA10 coaxial cable with this unit.
- Make sure to set the INPUT SELECT switch of the connecting cable to DIGITAL before recording. Switching the digital/analog switch during recording will cause a short mute in the recording.

Tips

In digital connection, note the following:

- Setting the recording mode is not required.
- The recording level is set automatically to the level of the source. Manual adjustment is not available in this case.
- Setting of the SP•LP switch is applicable when recording a 32 kHz source only. (When set to SP, the source is recorded in the 32 kHz SP mode. When set to LP, the source is recorded in the 32 kHz LP mode.)
  Other sources will be automatically recorded in its own sampling frequency regardless of the SP•LP switch. In this case, you cannot record in the LP mode.

Recording from audio equipment with digital output (Digital connection)

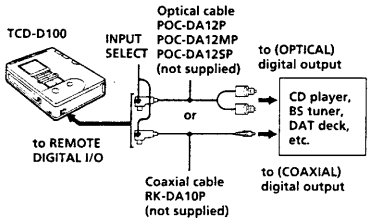

1. Use and connect the optical cable or coaxial cable according to the digital output jack of the connected equipment.
2. Set the INPUT SELECT switch of the connecting cable to DIGITAL.
3. Press the ● REC and ❚❚ PAUSE buttons.
4. Press either the ► PLAY or ❚❚ PAUSE button to begin recording. Then, begin playback of the connected source.

Source and sampling frequency for recording

When recording with digital connection, the sources will be automatically recorded in its own sampling frequency shown below.

Source	Sampling frequency
Broadcasting satellite B mode audio DAT SP mode	48 kHz
CD MD DAT SP mode	44.1 kHz
Broadcasting satellite A mode audio DAT LP mode	32 kHz

Useful Recording Functions

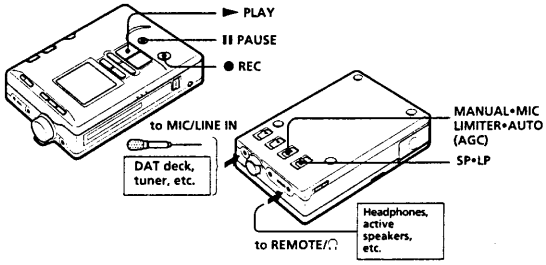

What's the MIC LIMITER?

The MIC LIMITER automatically holds down sudden large input signals. Setting the recording mode to MIC LIMITER and setting the recording level slightly higher than the usual level will give good results when recording at parties or conferences.

Notes

- Manual adjustment of the recording level is unavailable when recording via digital connection.
- Recording level is set excessively high when OVER appears in the right side of the peak level indicator. Turn down the recording level.

If distortion still occurs when OVER is not displayed, set the MIC ATT switch to20dB or move the microphone away from the sound source.

Adjusting the recording level manually—Manual recording

For optimum recording with microphones or from analog audio equipment, adjust the recording level manually.

1. Set the MANUAL•MIC LIMITER•AUTO (AGC) switch to MANUAL or MIC LIMITER.
   MANUAL: to record via analog connection or microphones.
   MIC LIMITER: to record via microphones.
2. Press the ● REC button to enter the recording monitor mode.
3. Begin playback of the source and turn the REC LEVEL control to adjust the recording level while monitoring the sound.
   Turn the REC LEVEL control so that the peak level indicators are maintained around level ⑫. Make sure that OVER does not appear when there is a loud sound input.

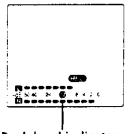

4. Press the ► PLAY button while pressing the ● REC button to begin recording.

Notes

- A tape recorded in the LP mode cannot be played back on a DAT deck which is not equipped with the LP mode function.
- A loud noise may be heard during the transition from the SP mode to the LP mode when a tape containing a recording that has been switched from the SP mode to the LP mode halfway is played back on a DAT deck which is not equipped with the LP mode function. In this case, turn down the volume or stop playback.

Recording in the Long Play mode—LP REC

Set the SP•LP switch to LP to record twice the recording time of conventional DAT cassettes. Accordingly, a 60-minute DAT cassette recorded in the LP mode enables recording of 120 minutes.

Tape counter display during LP mode

The absolute time and the remaining time of the tape are based on the SP mode. Therefore, the actual time is twice the amount of the value shown on the display.

The actual time during LP mode is 4 and half minutes.

Tip

To insert a blank segment of 4 seconds or more, press the ❚❚ PAUSE button while pressing the ● REC button, and then hold down only the ❚❚ PAUSE button for 4 seconds or longer. When the blank segment exceeds four seconds, "❚❚" indicator will flash quikly. The tape-corder re-enters the pause mode when the ❚❚ PAUSE button is released.

Recording blank segments—REC MUTE

A blank segment can be inserted at the beginning of the track and between tracks. In this case, the Start ID is not written.

1. Press the ● REC button and the ❚❚ PAUSE button to enter the recording pause mode.
2. Press the ❚❚ PAUSE button while pressing the ● REC button.

   A four-second blank segment is inserted and the unit returns to the recording pause mode automatically.

Monitoring the recording

Use the headphones or speakers of the stereo unit to monitor the sound while recording.

1. Plug the headphones to the REMOTE/🎧 jack or the stereo unit to the LINE OUT jack of the tape-corder.
2. Begin recording.

Writing Start IDs

A Start ID is a signal which indicates the beginning of a program (track). The tape-corder searches the Start IDs to locate the beginning of a program (track) with the AMS (Automatic Music Sensor) function.

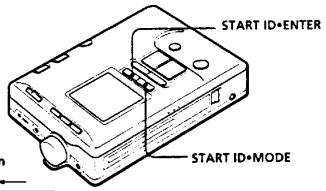

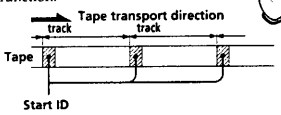

Tips

- To write the Start ID manually during recording, press the START ID•ENTER button. The Start ID is written at the point where the START ID•ENTER button is pressed regardless of whether "AUTO-ID" is displayed or not.
- You can only switch AUTO-ID on or off when START ID•MODE is pressed during recording, recording monitor or recording pause modes.

Note

- The buttons except the ■ STOP button do not work while START-ID is flashing.

Writing Start IDs during recording

When AUTO-ID is turned on, the Start IDs will be written during recording on the basis of the output level of the source. When AUTO-ID is turned off, the Start IDs will be written during recording on the basis of the existing ID information of the source.

1. Press the START ID•MODE button on the main unit repeatedly until "AUTO-ID" appears (to turn on AUTO-ID) or disappears (to turn off AUTO-ID).

2. Begin the recording. When the Start ID is written, "WRITE" appears for a moment, and then START-ID flashes for about 9 seconds (about 18 seconds in the LP mode).

Notes

- When AUTO-ID is turned on, the Start ID may not be written properly if there is noise in the sound source.
- When writing Start IDs continuously, make sure that there is an interval of 9 seconds or longer (18 seconds or longer in the LP mode) between the start IDs. Otherwise, the tape-corder may not locate the beginning of a track correctly.
- When AUTO-ID is turned off during digital connection, the existing program (track) information of the CD may not be written properly as the Start ID depending on the CD player in use.
- The existing program (track) information of an MD is not written as the Start ID.

To write Start ID when AUTO-ID is turned on

Source	A Start ID is written when
All	• Recording begins or the recording pause is released. (During a soundless segment, Start ID is written at the point where sound is emitted.) • A sound is input after a soundless segment or a segment with a very low recording level of 3 seconds or longer. • The START ID•ENTER button is pressed during recording.

To write Start ID when AUTO-ID is turned off

Source	A Start ID is written when
All	• Recording begins or the recording pause is released. (Start ID is written regardless of whether the segment contains a sound or not.) • The START ID•ENTER button is pressed during recording.
CD player (digital input)	Identical to the existing track information of the CD. (In addition to the above.)
DAT player (digital input)	Identical to the existing track information of the DAT tape. (In addition to the above.)

Writing Start IDs during playback

You can write a Start ID anywhere you want without erasing the contents of the existing recording.

1. Press the START ID•MODE button on the main unit repeatedly until "AUTO ID" appears (to turn on AUTO-ID) or disappears (to turn off AUTO-ID).
2. Press the START ID•ENTER button during playback where you want to rewrite.

   "REHRSAL" flashes when you select the point for Start ID. The tape-corder plays back the segment of the tape up to 3 seconds from the point and repeats it 16 times (Rehearsal function).

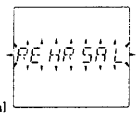

Notes

- Start IDs which were written during recording or written after the selected point cannot be moved. To move the Start IDs, rewrite it after erasing.
- Start IDs cannot be written while START-ID is flashing rapidly during the Rehearsal function.

3. Press the START ID•ENTER button during Rehearsal function. "WRITE" will appear for a moment. "START-ID" will flash and the Start ID will be written. During this step the sound will be muted.

To adjust the selected point

Each time you press the ⏮ ◀◀ or ▶▶ ⏭ button, the selected point shifts backwards or forwards in 0.3-second increments, up to a maximum extent of about 10 seconds in either direction.

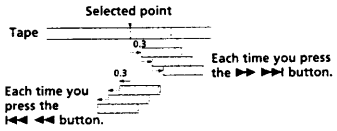

Note

If a Start ID is erased, the program number which is written on the same point will be erased also.

Erasing Start IDs

You can erase the Start IDs without erasing the contents of the existing recording.

Erasing the Start ID is possible only when the tape-corder is in the stop or playback mode.

1. Press the ▶▶ ⏭ or ⏮ ◀◀ button to locate the Start ID you want to erase.
2. Press the START ID•MODE button repeatedly until "ERASE" appears in the display of the main unit.
3. Press the START ID•ENTER button.

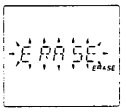

The tape will automatically rewind to find the Start ID of that program (track) and then "START-ID" will flash in the display and start to erase the Start ID. During this step the sound will be muted. Playback will start when this mode is done.

Assigning Program Numbers

A program number is a signal which indicates the number of the program (track).

The program number is written at the same time as the Start ID.

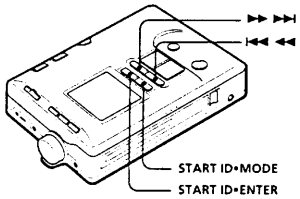

When recording from the beginning of the tape

The program number is written automatically from number 1 in sequential order at the same time as the Start ID.

When recording from the halfway of the tape

Press the ▶▶ ▶▶I or I◀◀ ◀◀ button to display the program number before you begin recording.
The program number is written in sequential order from the following program at the same time the Start ID is written.

Renumbering the program number

1 Press the START ID•MODE button repeatedly until "RENUMBER" appears in the display of the main unit.

2 Press the START ID•ENTER button when the tape-corder is in the stop or playback mode.
The tape will automatically rewind to the beginning of the program number that was written with the Start ID and then starts to renumber the program (tracks).

" START-ID " flashes while the program number is renumbered and " RENUM " and the tape counter appears while the tape is fast forwarding to the next Start ID program (track).
When the renumbering operation is completed, the tape-corder rewinds the tape to the beginning and stops.

Note

Writing and renumbering of the program number may not be completed successfully to a tape that has been recorded on other DAT decks and has a Start ID at the beginning.

Tip

Renumbering is necessary for the following tapes:
- On which the Start ID was written during playback.
- Which has missing program numbers or duplicated program numbers because the tape is recorded from the halfway of it.
- Which has a missing program number because the program number was erased at the same time a Start ID was erased on the tape.

Connecting with Other Equipment for Playback

You can connect the tape-corder to other analog audio equipment and audio equipment with digital output. Refer to page 19 for "Playing Back".

Tip

The output level of the LINE OUT jack and the REMOTE•DIGITAL I/O jack is fixed. The volume cannot be adjusted with the VOLUME buttons of this tape-corder.

Note

Use only the recommended optical cable (not supplied) (page 47).
You cannot use the POC-DA12/DA12M/DA12S digital connecting cables or RK-DA10 coaxial cable with this unit.

Playback with an analog audio equipment (Analog connection)

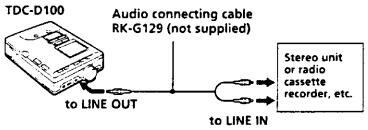

Begin playback and adjust the volume of the connected equipment.

Playback with an audio equipment with digital input (Digital connection)

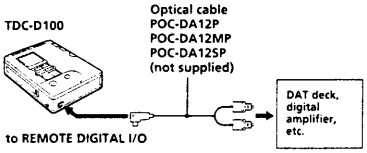

Connect the digital audio equipment to this tape-corder as shown. Begin playback and adjust the volume of the connected equipment.

Useful Playback Functions

The AVLS* function is operational when using the headphones during playback or in the recording monitor mode.
The AVLS function keeps down the maximum volume to protect your ears.

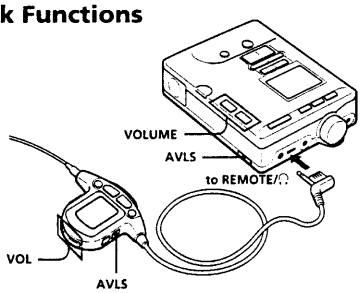

* Auto Volume Limiter System

Note

You may operate the AVLS function on both the main unit or the remote control. You can cancel AVLS by pressing AVLS on the remote control even if the AVLS switch on the main unit is set to LIMIT. "Ⓔ" will disappear from the remote display and AVLS will be cancelled.

Using the AVLS function

Operational either from the main unit or the remote control.

Main unit: Set the AVLS switch to LIMIT.

Remote control: Press AVLS on the remote control. "Ⓔ" will be displayed in the window of the remote control.

AVLS switch	Volume and display
LIMIT (Ⓔ)	The maximum volume is restricted to a designated level. "AVLS" appears followed by "VOL" when the VOLUME button is pressed. When the volume is turned to the maximum level, "AVLS" flashes.
NORM (none)	The volume control is set to normal. Each time you press the VOLUME buttons, the volume level changes accordingly and "VOL" appears. When the volume is turned to the maximum level, "MAX" appears.

( ) is indicated for the remote control.

Using the unit on Nickel Metal Hydride Rechargeable Batteries

You can use the Nickel Metal Hydride rechargeagble batteries NH-D100. Before using the nickel metal hydride rechargeagble batteries, be sure to charge it.

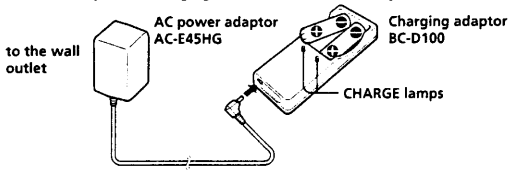

Tips
- The charging adaptor can charge either one battery or two batteries at a time.
- During the charging, the rechargeable batteries and the AC power adaptor may emit some heat, but this is not a malfunction.

Notes
- Use only the recommended rechargeable battery, charging adaptor and AC power adaptor for charging.
If you use other types of charging equipment, this may lead to a malfunction.
- When the CHARGE lamp flashes a red light, remove the rechargeable battery and check the polarity and the conditon of the batteries. If there is no problem with the battery, try to charge them again. You cannot charge a dry battery or a fully-charged rechargeable battery.

1 Connect the charging adaptor BC-D100 to the AC power adaptor AC-E45HG and then connect the AC power adaptor to a wall outlet.

2 Insert the nickel metal hydride rechargeable batteries NH-D100 into the charging compartment.

The CHARGE lamp will light red during charging. After the charging has been completed, the CHARGE lamp will light green. Charging will take about 2.5 hours. (The charging time may vary depending on the temperature.)

3 Insert the charged batteries into the battery compartment of the main unit.

Notes on charging
- Charge the battery just before using it.
- Charge the batteries that are completely exhausted (when "BATTERY" starts to flash in the display of the main unit).
- Charging may take longer than the average charging time if you are charging it for the first time or if you have not used the battery for a long time. The charging time will become average after you have charged it a few times.

On rechargeable batteries
- When the battery life of a fully charged battery becomes short, replace the rechargeable batteries with new ones.
- Be sure to cover the poles of the used batteries with elastic tape to insulate it and then dispose the used batteries.

Note

- Remove the rechargeable batteries as soon as possible from the charging adaptor when charging is finished. If you leave the rechargeable batteries in the charging adaptor for a long period of time it may decrease the battery capacity.

On battery placement

- Store the batteries in a cool, dry place.

Replacing the batteries

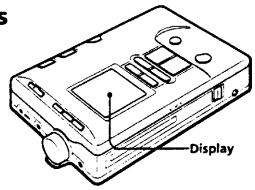

Tips

- This tape-corder is not equipped with a power switch. As a result, the LCD display will always be turned on as long as the batteries are inserted. However, power consumption is minimal and negligible.
- The clock will return to its default setting (TU/97Y4M1D/AM12H00M00S) if the batteries are removed from the tape-corder for a long time. In this case, set the clock again.

Notes

- If "bATTEPY" is still displayed after replacing the batteries press any button to clear this display.
- When using the unit on batteries, do not use a dry battery and a rechargeable battery together.
- The battery life may shorten depending on the temperature and the type of the battery. "bATTEPY" or "▭" may not be displayed depending on the type of battery. Use the recommended NH-D100 battery.
- When no plug is connected to the LINE OUT, REMOTE/⊙ or the REMOTE•DIGITAL I/O jacks and the display backlight turned off.

When to replace the batteries

The status of the remaining battery power is displayed on the main unit. On the remote display, "▭" will flash or appear when the batteries become weak.

Display on the main unit

E BATT F — Battery full.

↓

E BATT F — Replace both batteries with new ones. "bATTEPY" flashes and the tape-corder stops when used beyond this point.

Display on the remote control

▭ — The batteries are weak. Replace both batteries with new ones.

↓

▭ — The batteries are completely exhausted.

Battery life (Approx. hours)

Battery	Playback	Recording
Sony nickel metal hydride rechargeable (NH-D100)	3.75	3 (3.5*)
Sony alkaline LR6 (size AA)	2.5	1.5 (2.5*)

Values for battery life at 20°C and for long continuous playback or recording.
Battery capacity decreases and battery life becomes shorter in low temperatures.

Low-power Consumption Mode

If the tape-corder remains in the stop mode for 3 minutes* or longer, it will enter the low-power consumption mode automatically to conserve the battery.

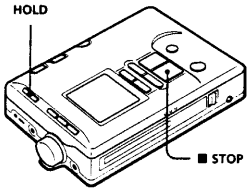

* The unit will enter the low-power consumption mode when the cassette holder is open for about 30 seconds. When the CLOCK button, etc., is pressed during a low-power consumption mode, the unit will re-enter the low-power consumption mode in about 30 seconds.

When the unit automatically switches to the low-power consumption mode

The tape unloads automatically to protect the tape and the tape-corder enters the low-power consumption mode to conserve the battery when the tape-corder is in the stop mode for 3 minutes* or longer. In the low-power consumption mode, the display changes to the clock and the backlight turns off. On the remote control the display is turned off.

To enter the low-power consumption mode manually

1. Make sure that the tape-corder is in the stop mode.

   Press the ■ STOP button if the tape-corder is in the pause mode.
2. Slide the HOLD switch on the main unit to show the yellow hold mark.

   The tape-corder enters the low-power consumption mode.

   When you press a button "HOLD" will flash for a few seconds in the display.

Operating with the AC Power Adaptor or Car Battery

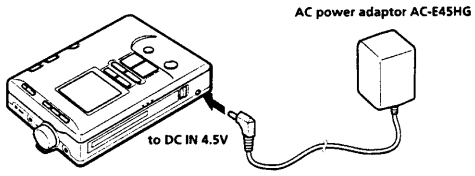

Tips

- When the AC power adaptor or the car battery cord is connected to the DC IN 4.5V jack of the tape-corder, the internal batteries are automatically disconnected. Power is automatically supplied from the external power source.
- When the AC power plug or the car battery cord is used for an extended period of time, the internal temperature of the tape-corder may rise. This is not a malfunction.
- If the unit is in the stop mode for more than 10 minutes while using the house current or a car battery. The set functions will be canceled and the tape will be unloaded for tape protection.

Using the AC power adaptor

Connect the AC power adaptor AC-E45HG to the DC IN 4.5V jack.

Notes on the AC power adaptor

- Use only the AC-E45HG AC power adaptor. Do not use any other AC power adaptor.

Polarity of the plug

- Make sure that the cassette compartment lid is closed before disconnecting the AC power adaptor or removing the batteries. The cassette compartment lid may not close if the power source is disconnected or removed while the cassette compartment lid is open. In this case, connect the power adaptor or insert the batteries again.

Using the car battery

To operate the tape-corder with the car battery, connect the car battery cord Sony DCC-E245 (not supplied) to the DC IN 4.5V jack of the tape-corder. For more details, refer to its Operating Instructions manual.

Connecting with Other Equipment

Connect other equipment to this tape-corder to enable flexible use of the tape-corder.

Notes on using the optional RM-D100K

- Operate this tape-corder with the AC power adaptor. Wireless remote control functions and digital input/output connections may not operate properly when the unit is operating on batteries.
- Do not leave the RM-D100K in a place subject to direct sunlight, as this may lead to a malfunction.

Note on using the SBM-1

When operating the optional SBM-1 with AC power adaptor, the power is supplied from this tape-corder if the power of the SBM-1 is turned off. When this tape-corder is operated with batteries, disconnect the AC power adaptor from the SBM-1 to conserve the battery.

Using the optional system adaptor kit RM-D100K

The optional RM-D100K functions as a relay unit between an equipment with digital I/O jack and this tape-corder.

The RM-D100K supports input/output of both optical and coaxial cables. Connect according to the jack of the digital audio equipment you wish to connect.

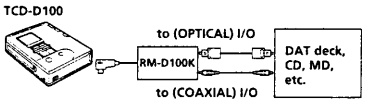

When the RM-D100K is connected

Combining the unit with a audio timer for timer recording or playback, and using the Music Scan function or Direct Search function on the supplied remote commander are many of the noteworthy features of the RM-D100K.

Using the optional Super Bit Mapping adaptor SBM-1

The optional SBM-1 enables recording of higher quality when connected to this tape-corder.

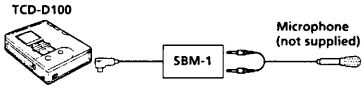

The optional RMT-D100 can be connected to the SBM-1 to enable remote control.

However, when operating the SBM-1 with the batteries, the RMT-D100 is not operational if the power of the SBM-1 is turned off. When operating the SBM-1 with the AC power adaptor, the RMT-D100 is operational regardless of whether the power of the SBM-1 is turned on or off.

Serial Copy Management System (SCMS)

The Serial Copy Management System (SCMS) which is incorporated in the domestic DAT equipments prevents repeated digital dubbing from one equipment to another. However, this system lets you record at least one generation of digital prerecorded software via digital connections.

Notes

- If the equipment used for recording is not protected with the SCMS, these rules may not apply.
- Even if digital dubbing is impossible, you can still dub tapes via analog connections.
- When digital dubbing is not possible, the message "COPY PROHIBIT" will appear in the display.

* These source examples may not apply to some countries.

Tip

During recording, recording monitor or recording pause modes, you can confirm the copy data that is going to be written on the tape. During playback or playback pause modes, you can confirm the copy data that is written on the tape.

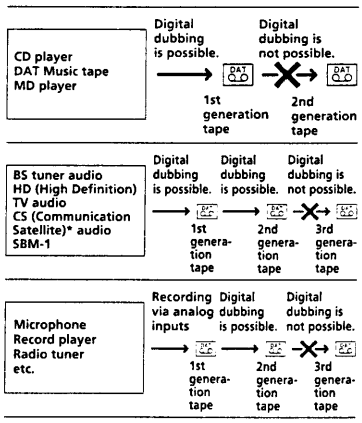

Confirming the copy data

You can confirm if digital copying is possible or not.

Hold down the RESET button during recording, recording monitor, playback, or pause modes when the tape counter is not displayed and then press the COUNTER button for more than 2 seconds.

ID 00:	Digital copying is possible as many times as you want.
ID 10:	Digital copying is not possible.
ID 11:	Digital copying is possible only once.

To clear the display, press the CLOCK, COUNTER or RESET button.

Message Display

The following messages will be displayed on the main unit while operating this unit.

Message	Description
NO TAPE	Flashes when there is no tape inside the unit.
OPEN	Flashes when the cassette compartment lid is open.
LOAD	Flashes while loading a tape.
No INPUT	Flashes when unloading a tape.
UNLOAD	Flashes when the digital input signal is not received.
COPY PROHIBT	COPY and PROHIBT appears alternately when the SCMS signal is received.
TAPE PROTECT	TAPE. and PROTECT appears alternately when the ● REC button is pressed or when writing/erasing a Start ID in the playback mode using a tape whose record-protect shutter is open.
HOLD	Flashes for a moment when you set the HOLD switch to HOLD on the main unit. Appears or flashes when you press a button while the HOLD function is operating.
TOP	Flashes when the beginning of a tape*1 is reached.
END	Flashes when the end of the tape is reached.
EE END	Appears when the End ID*2 is detected.
BLANK	Flashes when the unrecorded segment of a tape is detected during playback or fast-forwarding.
MIC in	Appears when the ● REC button is held down during MIC recording, recording pause, recording monitor modes.
LINE in	Appears when the ● REC button is held down during recording pause or recording monitor modes while another equipment is connected via the analog connection.
DIGITAL	Appears when the ● REC button is held down in the recording pause or recording monitor modes while another equipment is connected via the digital connection.
WRITE	Appears when the Start IDs are being written.
REHRSAL	Flashes when the Start ID is pressed during playback mode in the rehearsal function.
ERASE	Flashes when the Start IDs are being erased.
RENUM	Flashes when the program numbers are being renumbered.
AVLS	Flashes when the AVLS is set to LIMIT, or when the AVLS is operating and the VOLUME button is pressed.
MAX	Appears when volume is set to the maximum level.
MIN	Appears when volume is set to the minimun level.
BATTERY	Flashes when the batteries are weak.
ID	Appears when a digital copy data is displayed. 00: Digital copying is possible as many times as you want. 10: Digital copying is not possible. 11: Digital copying is possible only once.
DEW	Appears when moisture condensation occurs inside the unit.

*1 Flashes when a new (virgin) tape is used for the first time.

*2 The End ID is a signal which indicates the position of a tape where the recording has ended. You cannot register the End IDs with this unit, however the unit can play back the tapes which are registered with the End IDs and detect them. When the unit detects an End ID during fast forward, it stops there. You can only forward the tape by recording from that point. When the unit detects an End ID during playback, it enters the auto-rewind mode.

SECTION 2
DISASSEMBLY

SET ➡ PANEL ASSY, LOWER ➡ MAIN BOARD ➡ LID ASSY, CASSETE ➡ PC BOARD UNIT, SYSTEM CONTROL
↳ CABINET ➡ BRACKET ASSY, MD ➡ CHASSIS ASSY ➡ DRUM ASSY

2-1. PANEL ASSY, LOWER

Note: When assembling it, align the slide switch position, and assemble it.

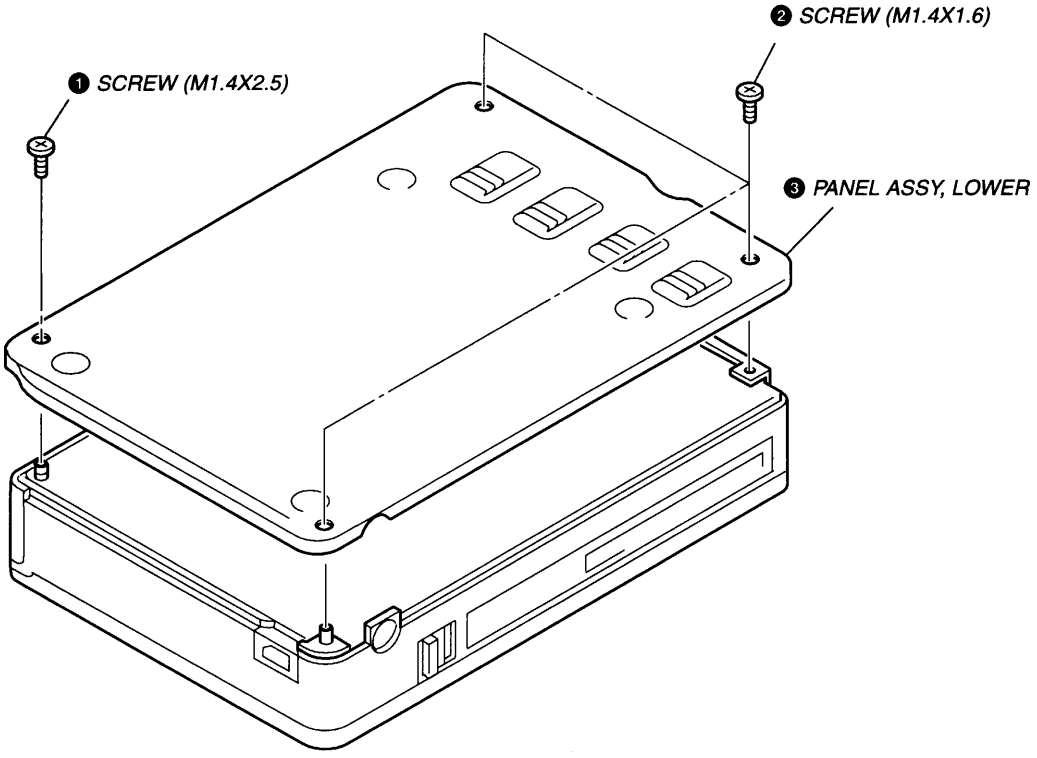

2-2. MAIN BOARD

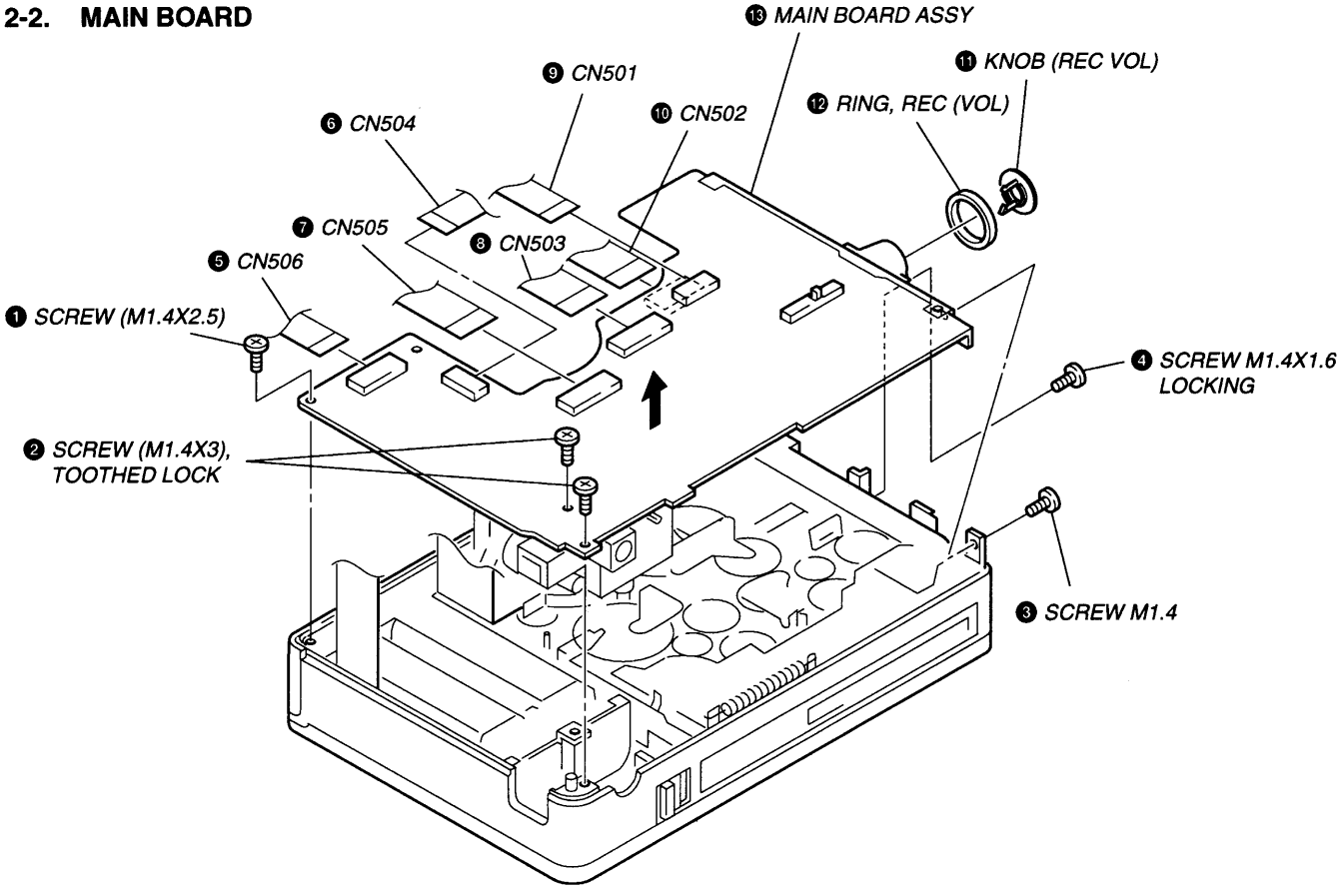

2-3. LID ASSY, CASSETTE

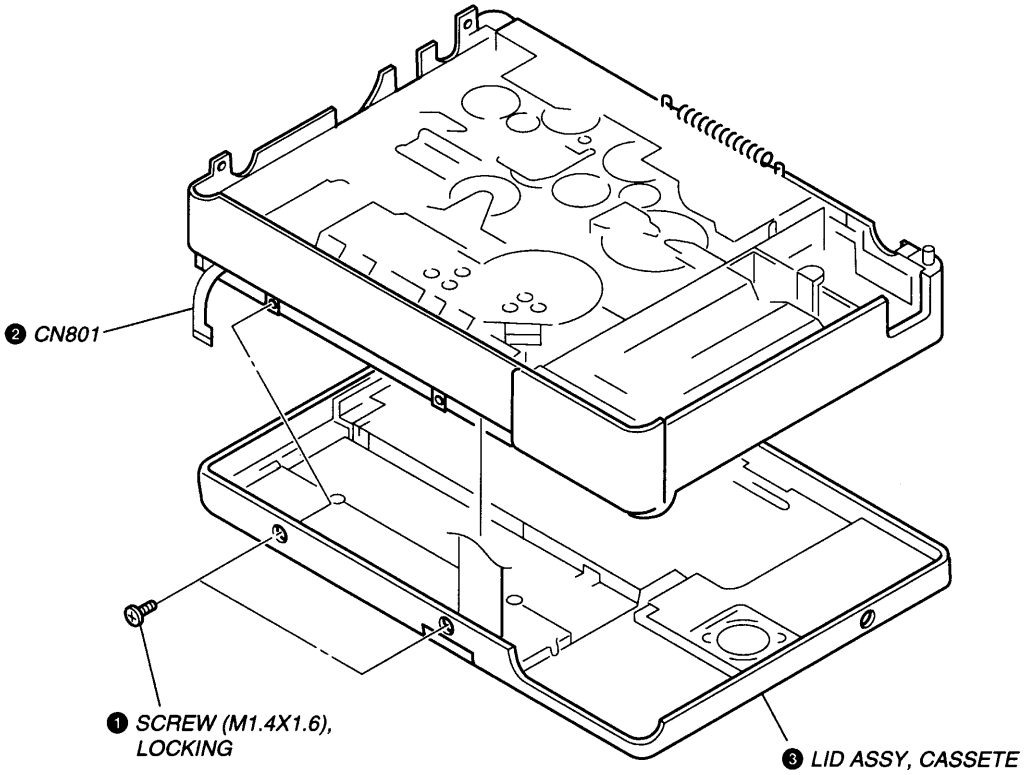

2-4. PC BOARD UNIT, SYSTEM CONTROL

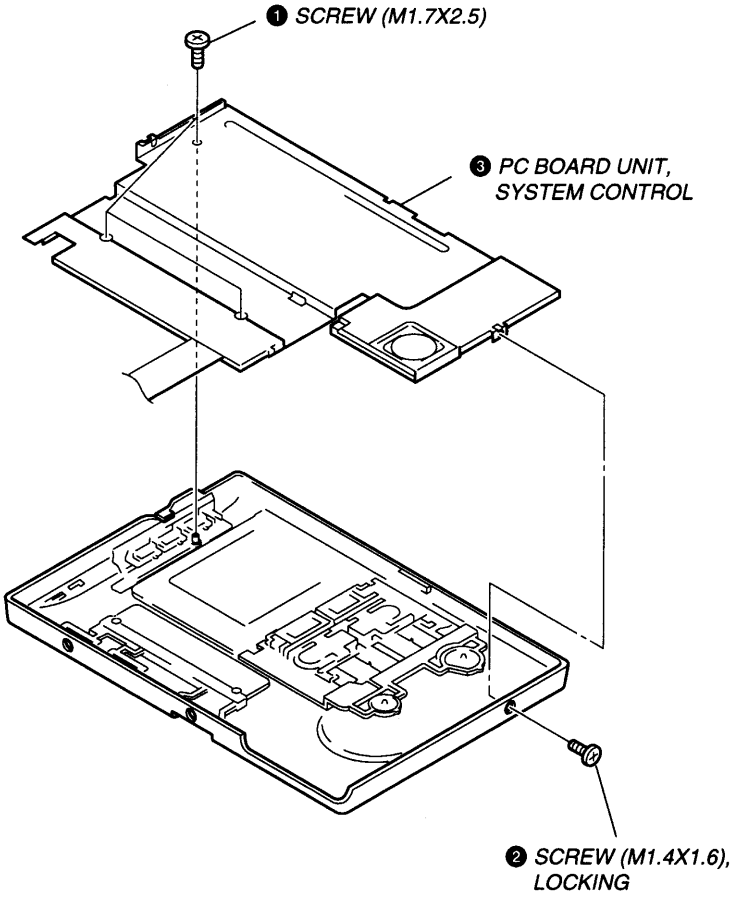

2-5. CABINET

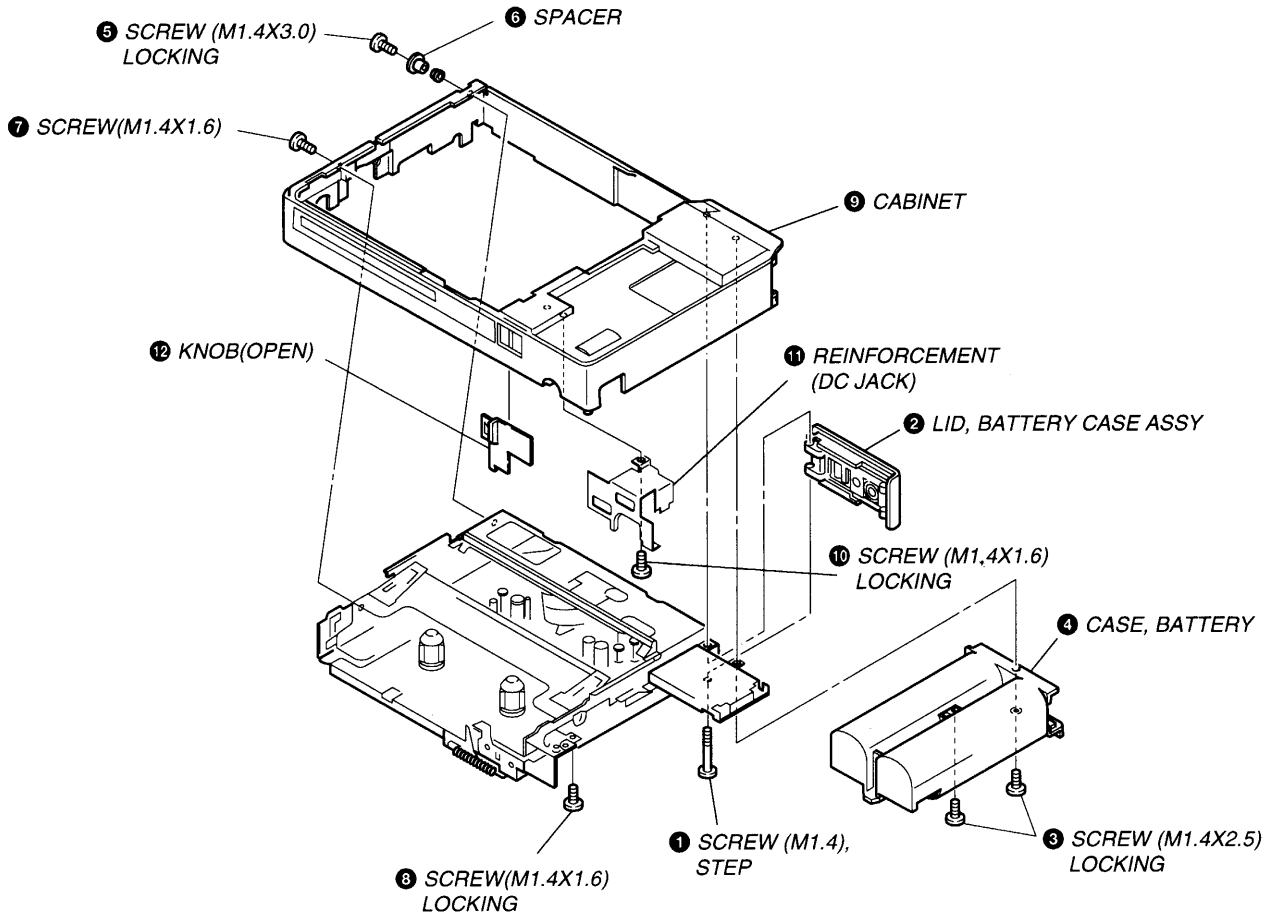

2-6. BRACKET ASSY, MD

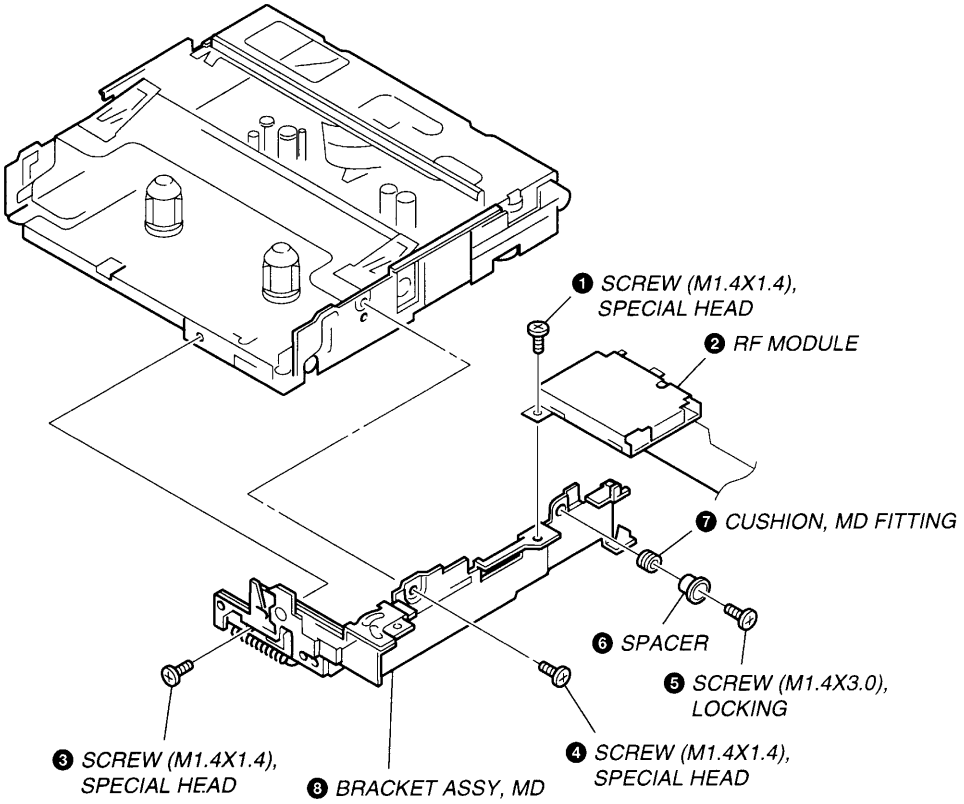

2-7. CHASSIS ASSY

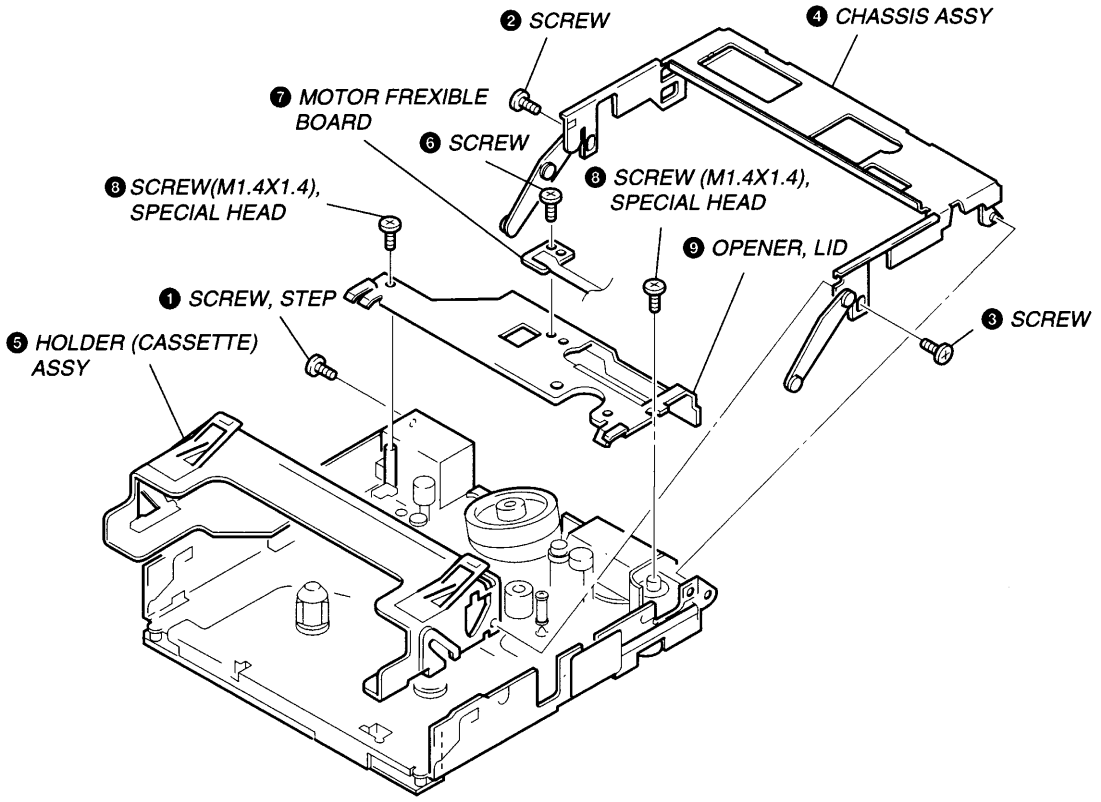

2-8. DRUM ASSY

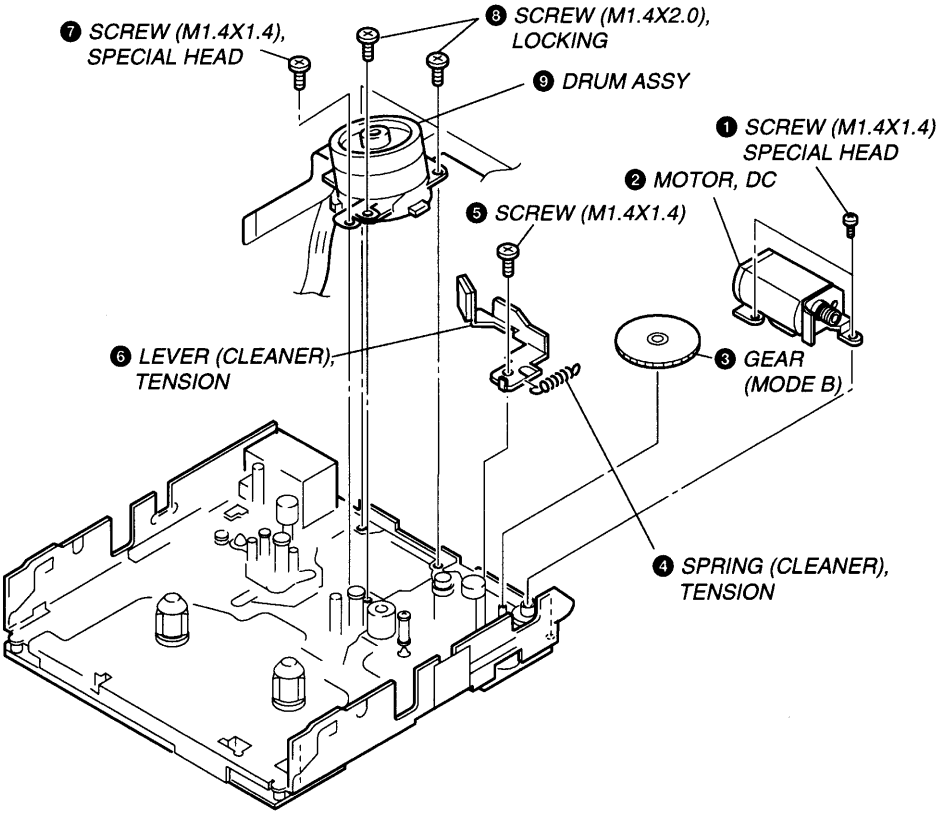

SECTION 3
ADJUSTMENTS

3-1. ADJUSTMENTS

Notes on Adjustment

1. Perform adjustments in the order given.

2. Use the following test tapes.
   TY-7111 (8-909-812-00) For playback level adjustment
   TY-7915 (8-913-932-00) For tape pass and switching pulse adjustments
   TY-30B (8-892-358-00) Blank tape
   Use the following torque meter.
   TW-7131 (8-909-708-71) For tension adjustment

3. Switch and knob positions
   As indicated in the adjustment procedures.
   SP/LP: SP 48kHz
   REC LEVEL : MIC LIMITER
   MIC/LINE IN : MIC
   MIC ATT : 0dB
   AVLS : NORM

4. Apply DC 4.5 V power to the DC IN jack.

5. For rotary head drum cleaning, press a piece of chamois leather (2-034-697-00) or a four-times folded clean knit fabric moistened with small amount of alcohol against the drum lightly, and rotate the drum in counter-clockwise direction. (Rotate a few times.)

Test mode

1. Perform the adjustments in test mode.

2. How to enter the test mode.
   Press the STOP key, COUNTER key and OPEN button simultaneously when the main power is ON, to enter the test mode. Turn off the main power to exit the test mode.

3. When the machine enters the test mode, back light of the LCD turns on and the following initial display appears.
   At the same time, the mechanism starts loading, and display of the select test mode code segment of the LCD turns on. (It normally flashes.)

   Initial display of LCD

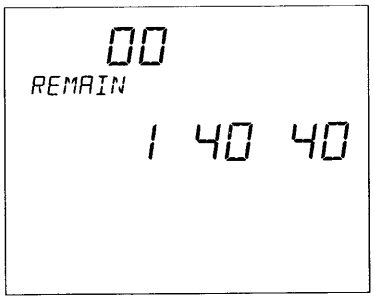

Note: The respective keys can be operated during test mode. The machine can mis-operate when the keys are operated during test most. However, mis-operation of the machine can be cleared by pressing the STOP key. At the same time, tape will not be damaged by mis-operation.

4. Types of test mode

Test mode code	Contents
01	Normal operating mode.
02	Error rate measurement mode.
20 21 22 23 24 25	Aging mode (This is the mode for evaluation, and is not used in service.
30	End sensor check mode. (Pulse drive under condition of FF/REW.)
31	End sensor check mode. (Pulse drive under condition of REW.)
32	T-reel lock check mode. (Under condition of FF/REW.)
40	Mechanism deck independent operation mode.
42	Tape pass adjustment mode.
43	Record current adjustment mode
99	Error code history check mode.

5. How to set the test mode code

- Test mode display

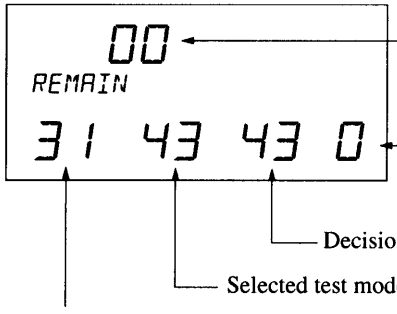

Error code: When an emergency occurs during test mode, an error code is displayed in the PGM no. column. (Refer to error code table.)

Adjustment target code: The adjustment target is displayed when the test mode code No. 43 is selected. (Refer to record current adjustment.)

Decision test mode code: The segments turn on. (Refer to types of test mode table.)

Selected test mode code: The segments flash. (Refer to types of test mode table.)

Capstan speed code: The capstan speed code is displayed. (Refer to capstan speed code table.)
Adjustment value is displayed when the test mode code No. 42 or 43 isselected.
(Refer to tape pass adjustment and the recode current adjustment.)
The mechanism mode code is displayed when the test mode code 99 is selected.
(Refer to the mechanism mode code table.)

Note: The display during the test mode can be changed by pressing the COUNTER key of the machine. However, confirm the current test mode by selecting the test mode display (REMAIN).

1). The segment value of the test mode code can be incremented or decremented by pressing the MODE key (up) or the CLOCK key (down).
MODE key (up) → 01 → 02 → 20 → 21 → 22 → 23 → 24 → 25 → 30 → 31 → 32 → 40 → 42 → 43 → 44 → 99 → 01.....
CLOCK key (down) → 01 → 99 → 44 → 43 → 42 → 40 → 32 → 31 → 30 → 25 → 24 → 23 → 22 → 21 → 20 → 02 → 01.....

2). The selected test mode code can be set by pressing the ENTER key. (The selected test mode code flashes before it is set.)

3). The speed mode can be incremented or decremented by pressing the VOLUME + key (up) or VOLUME - key (down).
VOLUME + key (up) → × 1FWD → × 0.5FWD → × 1.5FWD → × 3FWD → × 25FWD → × 4FWD → × 1FWD.....
VOLUME – key (down) → × 1REV → × 0.5REV → × 1.5REV → × 3REV → × 25REV → × 4REV → × 1REV.....

4). The error code can be reset by pressing the COUNTER RESET key during test mode.

5). Modify the adjustment value during the SWP (switching pulse) adjustment and the record current adjustment by pressing the VOLUME + key (up) or VOLUME - key (down).

6). The adjustment target can be selected during the record current adjustment (No. 43) by pressing the COUNTER RESET key.
The adjustment data must be saved in the EEPROM by pressing the LIGHT key.

6. Test mode code

< Operation check mode >

1) Set mode: 01
Displays error code which occurs during operation. (During test display)
Linear counter, A-TIME

2) Error rate measurement mode: 02
Measures error rate using a test tape or by self-recording/playback.
Error counter is displayed in the following display modes during playback.
Linear count mode: A-channel error
A-TIME: B-channel error

3) End sensor check mode: 30, 31
The end sensor LEDs are started to drive when either one of the following modes is set.
30: Pulse drive (2.9 ms cycle)
31: Under condition of the FWD mode (2.9 ms: ON/30 ms: OFF)
32: Under condition of the FF/FWD mode (2.9 ms cycle)

4) Mechanism deck independent operation check: 40
The end sensor does not detect tape end when tape is not loaded. However the end sensor detects tape end when tape is loaded.
The FWD/REV speed can be incremented or decremented by pressing the VOLUME + (up) key or the VOLUME – (down) key.

5) Tape pass adjustment mode: 42
The ATF-Servo SWP (switching pulse) adjustment is performed and the adjustment data is saved in EEPROM using this mode.

Capstan speed code display	Capstan speed code	Drum speed
1	× 1FWD	2000rpm
2	× 0.5FWD	1000rpm
3	× 1.5FWD	2000rpm
4	× 3FWD	2000rpm
5	× 25FWD	2000rpm
6	× 4FWD	2000rpm
–1	× 1REV	2000rpm
–2	× 0.5REV	1000rpm
–3	× 1.5REV	2000rpm
–4	× 3REV	2000rpm
–5	× 25REV	2000rpm
–6	× 4REV	2000rpm

6) Record current adjustment model: 43
The record current adjustments for A-channel PCM, A-channel ATF, B-channel PCM and B-channel ATF are performed in this mode.
The adjustment values can be saved in EEPROM using this mode.
ATF servo during playback mode

Adjustment target code display	Adjustment target
0	A-ch PCM
1	A-ch ATF
2	B-ch PCM
3	B-ch ATF

7) NVRAM write error-code check: 99

The error which occurs during the normal operation mode, and t he mechanism mode when the error occurs can be checked. The error code can be reset, too.

Saving the data in EEPROM and reset can be performed by pressing the LIGHT button.

The two digit mechanism mode code is displayed: The first digit indicates the present mode and the second digit indicates the next mode.

When the present mode and the next mode are the same, it indicates that an error occurs.

When the present mode and the next mode are different, it indicates that an error occurs during transition from the present mode to the next mode.

Code	Contents
0	INITIAL CODE
1	× 1_FWD
2	× 3_FWD
3	× 4_FWD
4	× 25_FWD
5	REC
6	UNLOAD
7	EJECT
8	STOP
9	× 1_REV
A	× 3_REV
B	× 4_REV
C	× 25_REV
D	FF
E	REW
F	PAUSE (FWD-PAUSE)

7. Error code table

Code	Block	Contents
00		No error.
01* ~ 0F*	Control motor (Rotary encoder)	Position cannot be detected.
10		Loading cannot be completed.
11	Mechanism deck	Unloading cannot be completed.
12		Eject does not take place.
13		T-side end sensor is defective.
14		S-side end sensor is defective.
15	Drum	Dew condensation.
20		Drum motor does not rotate.
21		Drum servo does not lock in.
30	Capstan	Capstan motor does not rotate.
31		Capstan speed does not lock in.
40	Reel	T-reel FG cannot be detected.
41		S-reel FG cannot be detected.
90	EEPROM	B group data saving resulted in NG.
91		C group data saving resulted in NG.
92		B and C group data saving resulted in NG.

* When position of rotary encoder cannot be detected, an error code is created in such a way that 0 is added in the top of the present position number, and is displayed.

Present position	Error code	Present position	Error code
STOP ~ FWD	01	STOP	09
EJECT	02	EJECT ~ CASS-IN	0A
CASS-IN ~ UNLOAD	03	CASS-IN	0B
FWD	05	FF-REW	0C
LOADING-L	06	FWD ~ REV	0D
UNLOAD	07	LOADING-H	0E
FF-REW ~ STOP	08	REV	0F

Mechanism adjustment parts layout diagram

– Mechanism –

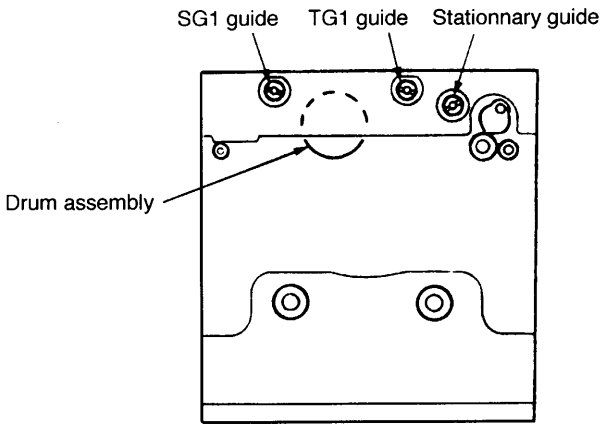

– Main board –

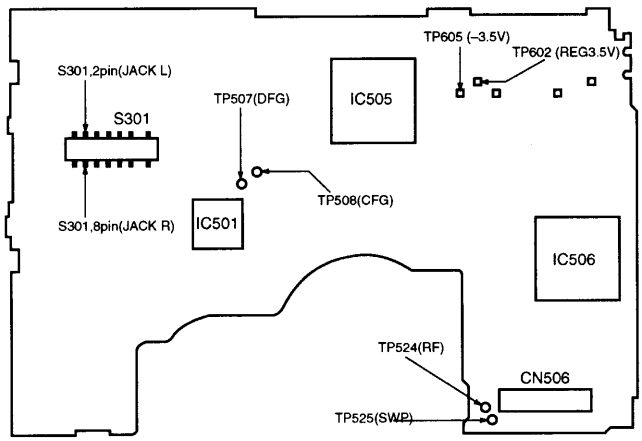

3-2. MECHANICAL ADJUSTMENTS

Tape pass adjustment

Note: Be sure to perform the tape pass adjustment when rotary drum is replaced.

Preparation: Oscilloscope CH-1: AC 100 mV/DIV
CH-2: DC 2 V/DIV
TRIG: CH-2

1. Connect an oscilloscope CH-1 to TP524 (RF) and CH-2 to TP525 (SWP).
2. Insert a test tape TY-7915 and find the center of the tape.
3. Establish the test mode.
4. Select and set the test mode code 42.
5. Decrease the SG1 guide (by rotating it clockwise), and remove a tape (Fig. 1).

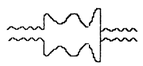
(Fig-1)

6. Move down the TG1 guide (by turning it clockwise), remove a tape (Fig. 2) and turn it counter-clockwise until the right side edge of the RF waveform becomes square as shown (Fig. 3).
7. Turn the SG1 guide counter-clockwise until the left side edge of the RF waveform becomes square as shown (Fig. 4).

   Notice that the lower flange of the stationary guide does not contact with tape.
   Confirm also that tape runs along with the upper flange of the SG1 and TG1 guides.
8. Adjust the lower flange of the stationary guide. Adjust height of the stationary guide until the lower flange contacts the tape during tape run in the PLAY mode. Tape must not show any curls.

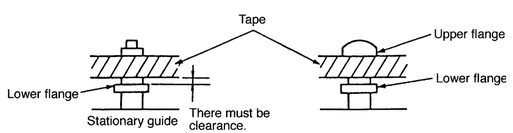


(Fig-2)

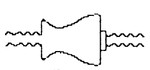
(Fig-3)

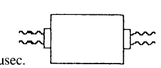
(Fig-4)

9. Perform the switching pulse adjustment. (Refer to 3-3. ELECTRICAL ADJUSTMENT) (Fig. 5) 1083±25μsec.
10. Select and set the test mode code 02.
11. Observe the RF waveform and confirm that the waveform increases and decreases its amplitude while maintaining it parallel waveform. (Fig. 6)
12. Repeat the STOP, UNLOAD and FWD modes, and confirm that the RF waveform follows step 11. When the RF waveform loses parallel shape, repeat steps 5 to 8.
13. Move down the SG1 guide (by turning it clockwise), and confirm that the RF waveform loses parallel shape, then return the SG1 guide to original position. When the original waveshape cannot be restored (Fig. 7), repeat steps 5 to 8.

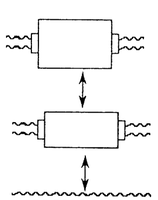
(Fig-6)

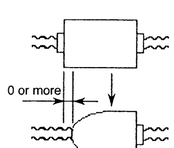

(Fig-7)

14. Move down the TG1 guide (by turning it clockwise), and confirm that the RF waveform loses parallel shape, then return the SG1 guide to original position. When the original waveshape cannot be restored (Fig. 8), repeat steps 5 to 8.

    (note) Do not adjust the SG1 and TG1 guides at the same time.They must be testified and adjusted independently.)
    Be sure to complete adjustment of either one of the guides, then start adjustment on the other guide.
15. Confirm that the waveform during the FWD mode is obtained in the following modes.
    Confirm also that the waveform in the FF/REW mode conforms to the waveform shown in Fig. 9.
    FWD → STOP → FWD → CUE → FWD → REV → FWD → STOP → FF → FWD → STOP → REW → FWD → STOP → EJECT → FWD

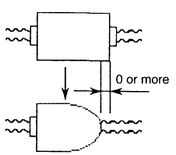

(Fig-8)

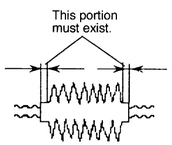

(Fig-9)

• Confirmation of torque
Preparation:
Remove the cassette lid from the holder.

[× 1 FWD mode]
1. Establish a test mode.
2. Select and set a test mode code 40.
3. Insert a torque meter TW-7131.
4. Establish the × 1 FWD mode by pressing the VOLUME + key.
5. Observe and confirm the torque meter reading.

   FWD takeup torque: 5 to 9 g•cm
   FWD back tension: 3 to 6.5 g•cm

[× 1 REV mode]
1. Establish a test mode.
2. Select and set a test mode code 40.
3. Insert a torque meter TW-7131.
4. Establish the × 3 REV mode by pressing the VOLUME – key.
5. Observe and confirm the torque meter reading.
   REV takeup torque: 5.5 to 8.5 g•cm
   REV back tension: 11.5 to 17 g•cm

• Confirmation of T-reel lock

1. Enter the test mode.
2. Set the test mode code to 32 using the MODE key. Then press the ENTER key.
3. Find the tape of a 120-minute tape. Insert the tape to the machine.
4. Press the STOP key. Confirm that any number of either 0, 1, 2, 3 or 4 appears in the display window when the EJECT key is pressed.
   If a number of 5 or higher appears, replace the Limiter (F reel) Assy (X-3373-741-1) and check the T-reel lock again.

• Confirmation of speed
[Capstan FG]
1. Connect a frequency counter to TP508 (CFG).
2. Establish a test mode.
3. Select and set the test mode code 40.
4. Insert a test tape TY-30B.
5. Establish the × 0.5 FWD then × 1 FWD modes by pressing the VOLUME + key and take reading of frequency counter respectively.

Mode	Frequency
× 0.5FWD	311Hz ± 5Hz
× 1FWD	622Hz ± 5Hz

[Drum FG]
1. Connect a frequency counter to TP507 (DFG).
2. Establish a test mode.
3. Select and set the test mode code 40.
4. Insert a test tape TY-30B.
5. Establish the × 0.5 FWD then × 1 FWD modes by pressing the VOLUME + key and take reading of frequency counter respectively.

Mode	Frequency
× 0.5FWD	400Hz ± 1Hz
× 1FWD	800Hz ± 1Hz

3-3. ELECTRICAL ADJUSTMENTS

• Voltage check
1. Establish a test mode.
2. Select and set the test mode code 40.
3. Measure DC voltage at the respective test points using VOM and confirm that the DC voltages satisfy the specifications.

Test point	Specifications
REG3.5V (TP602)	3.5V
– 3.5V (TP605)	– 3.5V
MIC L (TP101)	1.9V ± 0.3V
MIC R (TP201)	1.9V ± 0.3V

• Switching pulse (SWP) adjustment
Note: Be sure to perform the tape pass adjustment when rotary drum is replaced.
Preparation: Oscilloscope CH-1: AC 100 mV/DIV
CH-2: AC 2 V/DIV
TRIG:CH-2

1. Connect CH-1 of an oscilloscope to TP524 (RF) and CH-2 to TP525 (SWP).
2. Establish a test mode.
3. Select and set the test mode code 40 and speed code 1 using the VOLUME + (up) key. (× 1 FWD)
4. Insert a test tape TY-7915.
5. Select and set the test mode code 42.
6. Adjust the phase difference (T) between the SWP signal and the RF signal using the VOLUME + (up) and the VOLUME – (down) keys until the specifications as shown is satisfied.

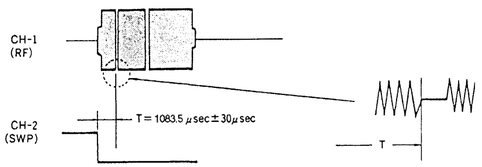

(Fig-5)

T=1083.5μsec ± 30μsec

7. Press the LIGHT button to save the data into EEPROM

• Record current adjustment

Note: The default adjustment value for each specific drum has already been printed on the bar code label as shown.
When you replace the drum with the new replacement drum, peel off the old bar code label from the machine and attach the new bar code label that is packed with the new replacement drum, to the machine. Then perform the record current adjustment.

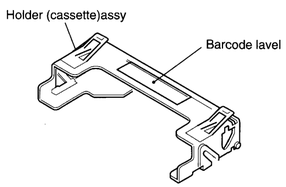

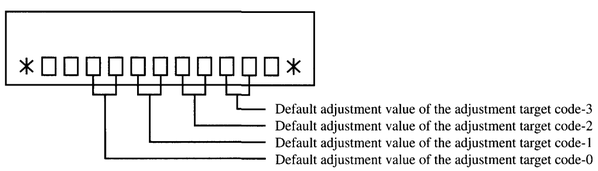

1. Enter the test mode.
2. Set the test mode code to 43 using the MODE key. Then press the ENTER key.
3. Confirm to see that the adjustment target code which is shown on the test mode display, is 0.
   When you need to change the adjustment target code, press the RESET/+ key to select the desired adjustment target code No.
4. Adjust the record current to the default adjustment value shown on the bar code label by pressing the VOLUME (+) or (-) key. Then press the LIGHT key.
5. Repeat the steps 3 and 4 until all adjustment items from the adjustment target code-0 to -3 are complete.

SECTION 4
DIAGRAM

4-1. BLOCK DIAGRAM — MD SECTION —

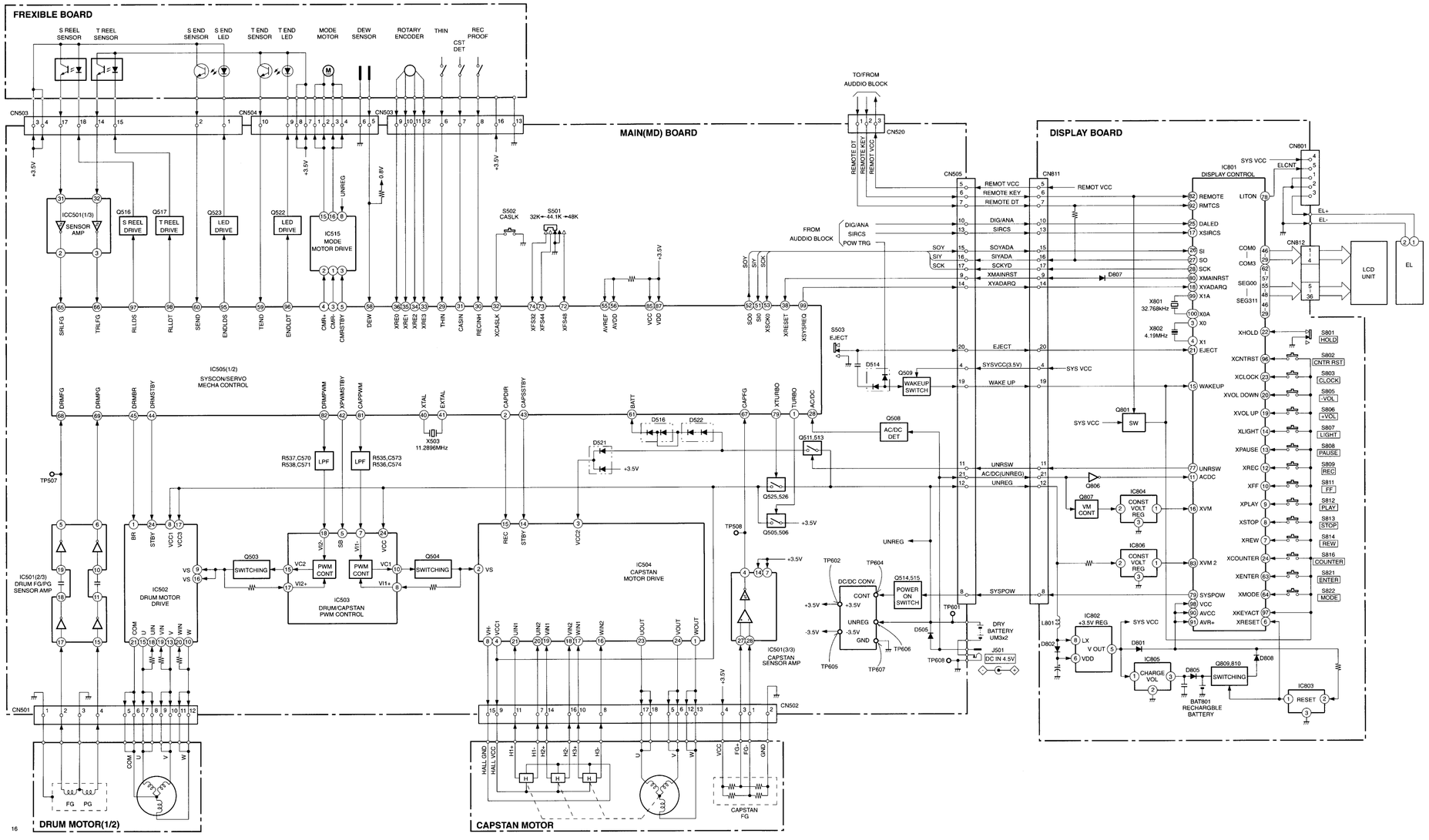

4-2. BLOCK DIAGRAM — AUDIO SECTION —

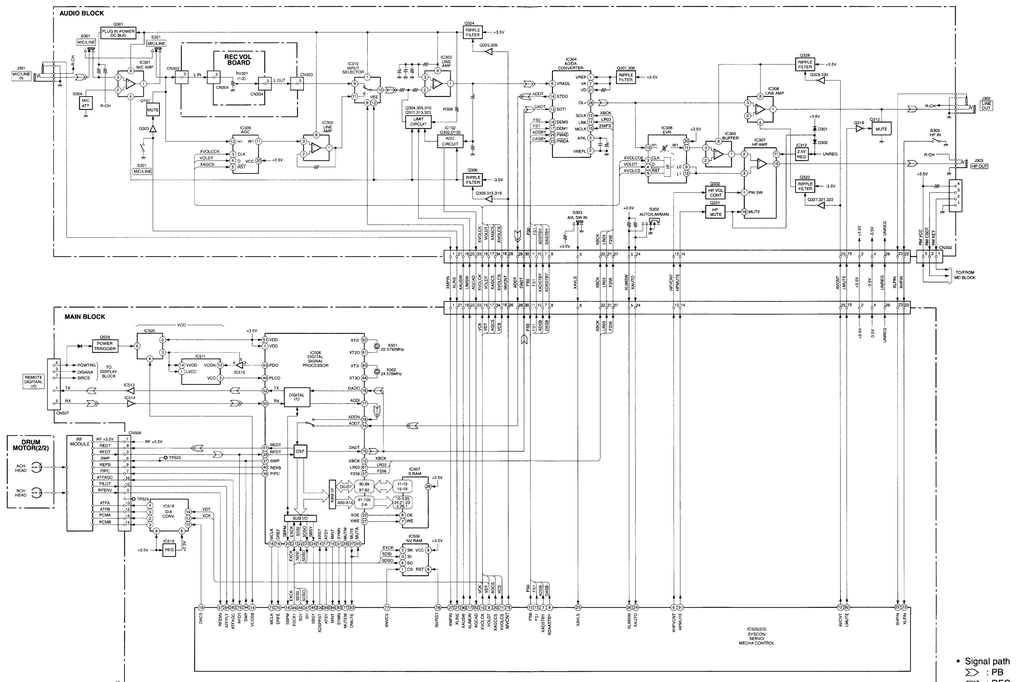

4-3. IC BLOCK DIAGRAM

IC304 AK4520-VF-E2

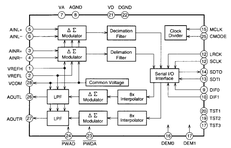

IC307 LA4800V-TLM

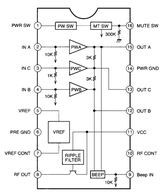

IC520 TK70001

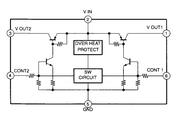

IC515 LB8632V

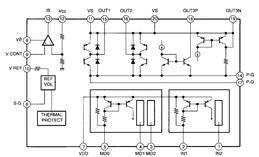

IC507 CXK5V8257BTM-70LL

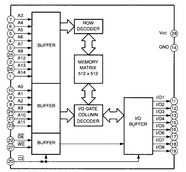

IC501 MM1138XQ

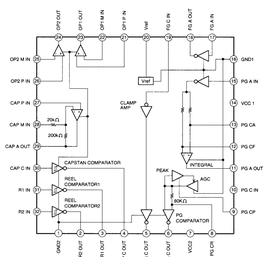

IC312 TK11225BMCL

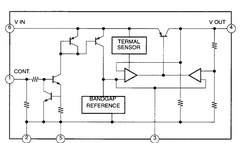

IC508 AK6420HM-E2

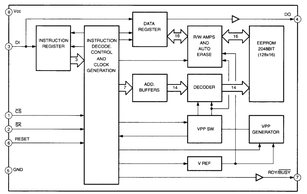

IC518 MB88347PFV

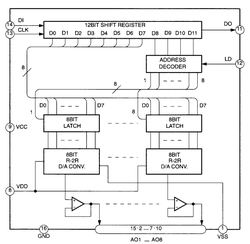

IC503 MB3796

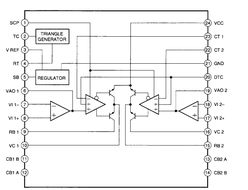

IC310 TK15325MT-L

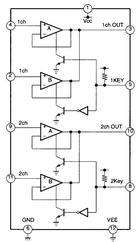

IC306 DS1802E

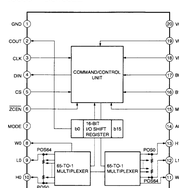

IC502 CXA8022N

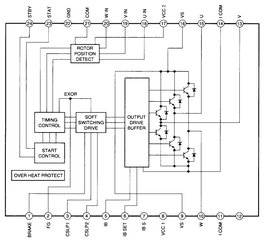

IC511 TLC29321

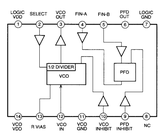

IC504 LB1882V

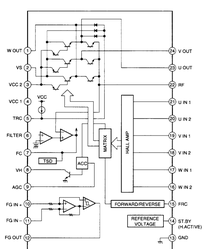

4-4. PRINTED WIRING BOARD

• Semiconductor Location

Ref. No.	Location	Ref. No.	Location
D102	C-5	Q101	C-4
D202	B-5	Q201	D-5
D301	D-23	Q301	D-5
D302	E-17	Q302	B-5
D303	H-2	Q303	C-4
D304	F-4	Q304	B-4
D305	G-3	Q305	A-22
D501	B-18	Q306	C-20
D504	D-18	Q307	B-19
D505	C-11	Q308	B-19
D506	D-10	Q309	C-20
D508	D-15	Q310	A-21
D509	D-15	Q311	B-21
D510	D-15	Q312	G-2
D511	D-15	Q313	B-21
D512	D-15	Q315	B-19
D514	F-16	Q318	G-3
D516	C-19	Q319	B-18
D517	E-20	Q320	C-19
D518	E-18	Q321	C-20
D519	D-15	Q322	D-20
D521	D-21	Q323	B-21
D522	C-18	Q324	A-20
		Q325	B-20
IC102	C-6	Q326	B-20
IC202	B-6	Q327	C-19
IC301	C-23	Q328	D-21
IC302	C-22	Q329	D-21
IC303	A-4	Q330	D-20
IC304	B-7	Q331	F-22
IC305	E-23	Q332	F-22
IC306	D-22	Q503	B-18
IC307	F-22	Q504	C-18
IC308	G-3	Q505	E-19
IC309	B-23	Q506	E-18
IC310	D-24	Q508	B-16
IC312	E-17	Q509	E-16
IC501	E-5	Q511	F-10
IC502	E-20	Q513	E-10
IC503	C-17	Q514	C-10
IC504	F-21	Q515	C-10
IC505	C-8	Q516	E-6
IC506	F-12	Q517	D-6
IC507	E-15	Q522	G-16
IC508	B-8	Q523	E-19
IC511	D-12	Q524	G-11
IC512	D-12	Q525	D-20
IC513	D-11	Q526	E-18
IC514	D-11		
IC515	G-12		
IC518	G-12		
IC519	H-12		
IC520	E-10		

Note:
- ⟷ : Parts extracted from the component side.
- ▒ : Pattern on the side which is seen.

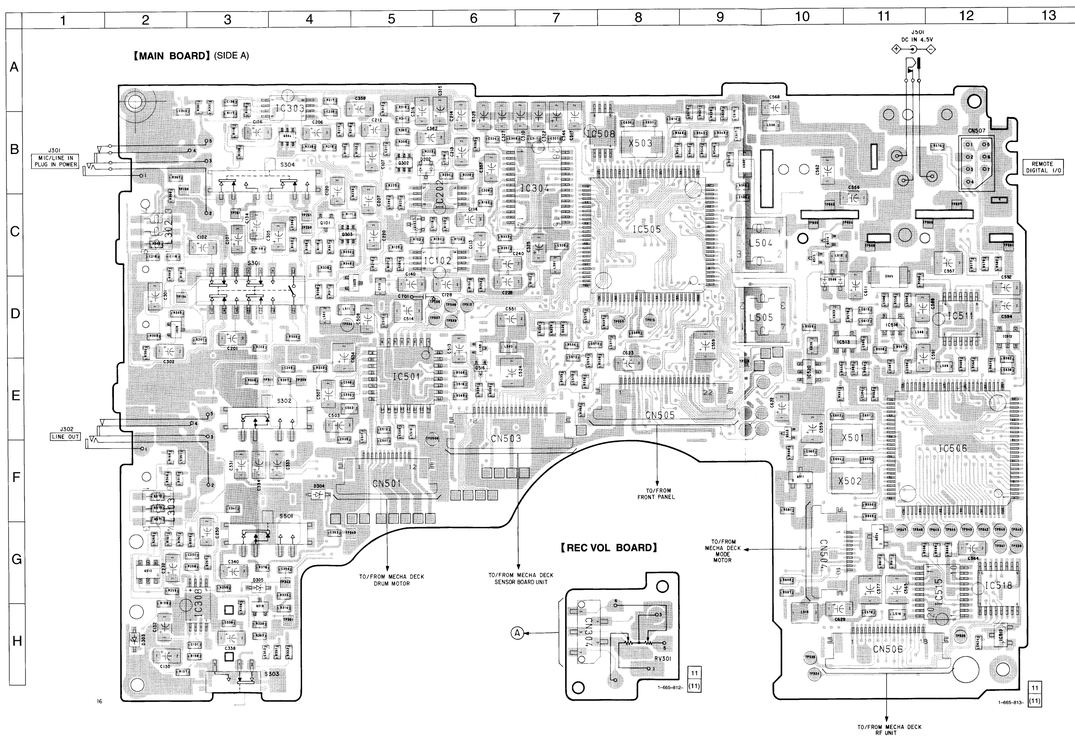

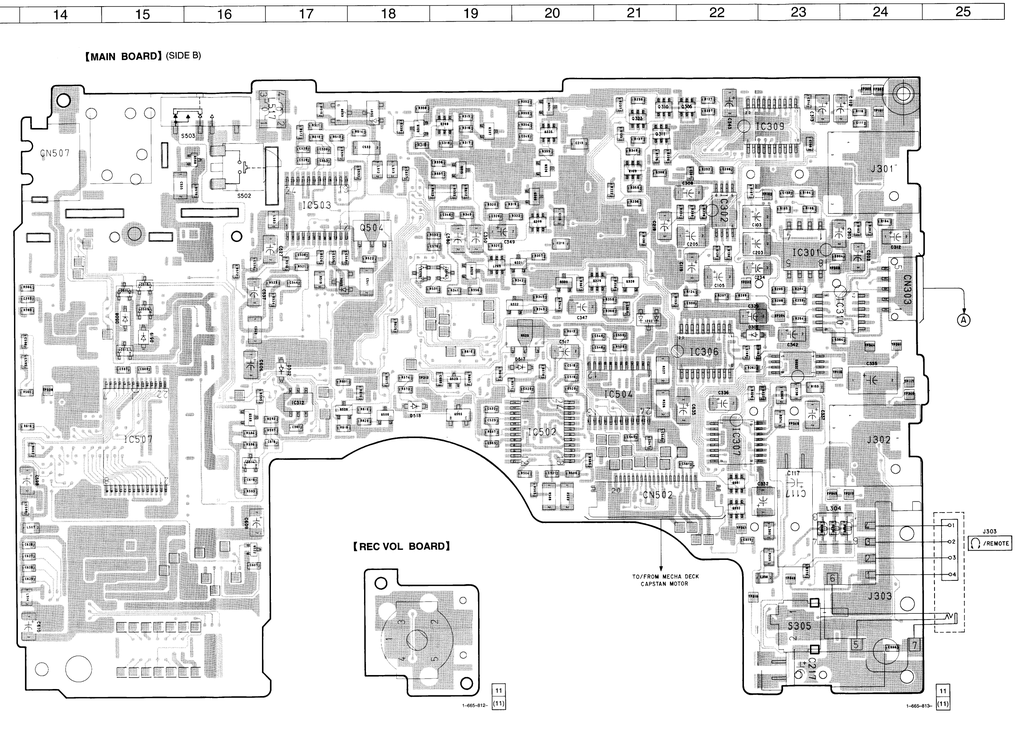

4-5. SCHEMATIC DIAGRAM — MAIN SECTION —

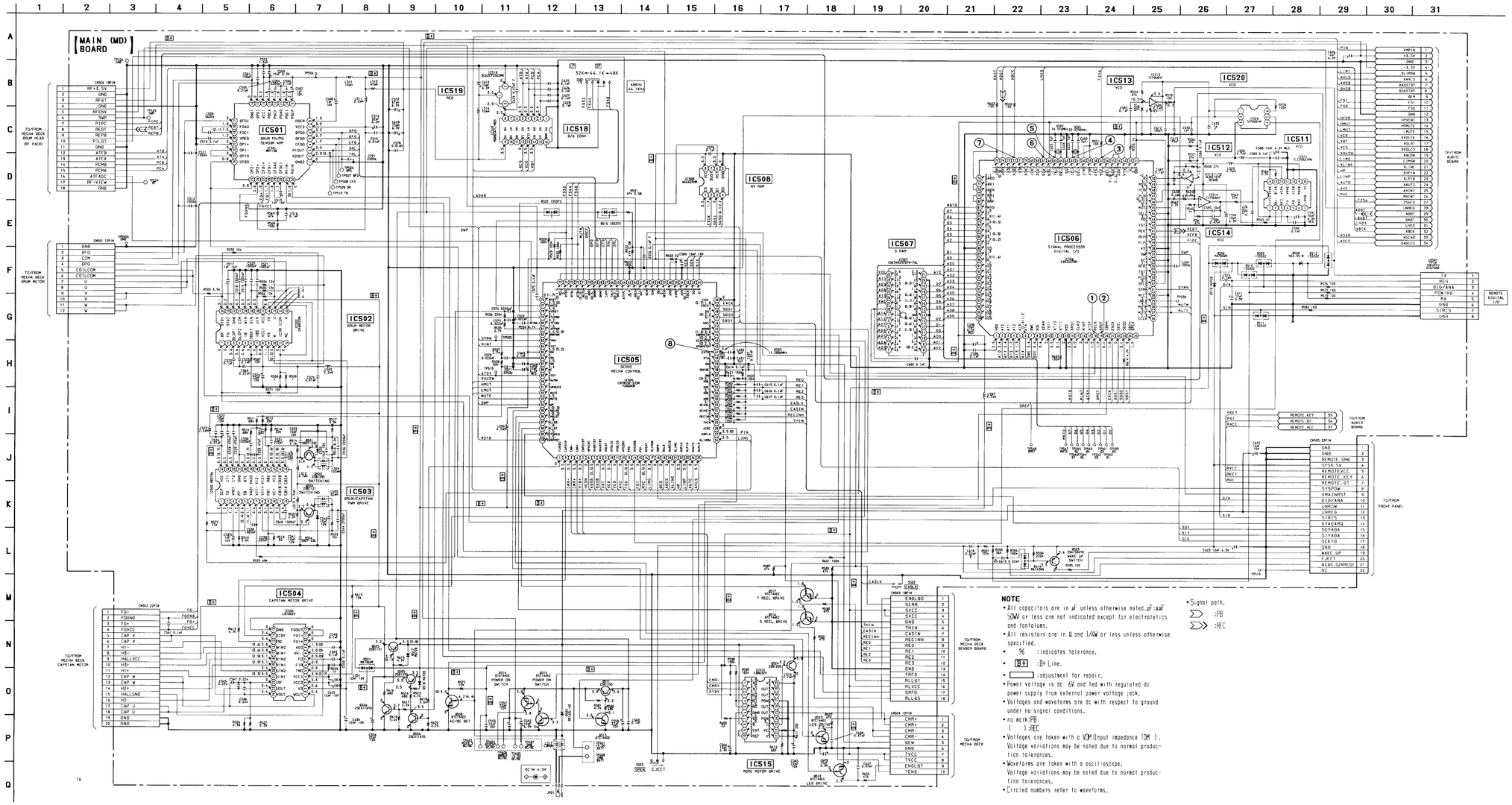

NOTE

- All capacitors are in μF unless otherwise noted. pF: μμF
- 50WV or less are not indicated except for electrolytics and tantalums.
- All resistors are in Ω and 1/4W or less unless otherwise specified.
- % : indicates tolerance.
- B+ : B+ Line.
- ▭ : adjustment for repair.
- Power voltage is dc 6V and fed with regulated dc power supply from external power voltage jack.
- Voltages and waveforms are dc with respect to ground under no signal conditions.
- no mark:PB
  ( ):REC
- Voltages are taken with a VOM (Input impedance 10M Ω). Voltage variations may be noted due to normal production tolerances.
- Waveforms are taken with a oscilloscope. Voltage variations may be noted due to normal production tolerances.
- Circled numbers refer to waveforms.
- Signal path.
  :PB
  :REC

• Waveforms

① IC506 ⑯ EE

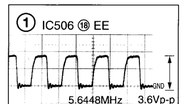

5.6448MHz 3.6Vp-p
0.1μsec/div 2V/div

② IC506 ⑲ EE

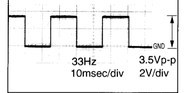

33Hz 3.5Vp-p
10msec/div 2V/div

③ IC506 ㊼ EE

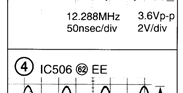

12.288MHz 3.6Vp-p
50nsec/div 2V/div

④ IC506 ㊷ EE

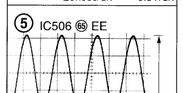

22.5792MHz 1.8Vp-p
20nsec/div 0.5V/div

⑤ IC506 ㊺ EE

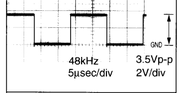

24.576MHz 2.0Vp-p
20nsec/div 0.5V/div

⑥ IC506 ㊼ EE

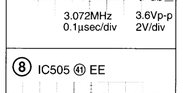

48kHz 3.5Vp-p
5μsec/div 2V/div

⑦ IC506 ㊷ EE

3.072MHz 3.6Vp-p
0.1μsec/div 2V/div

⑧ IC505 ㊶ EE

11.2896MHz 1.1Vp-p
50nsec/div 0.5V/div

4-6. SCHEMATIC DIAGRAM — AUDIO SECTION —

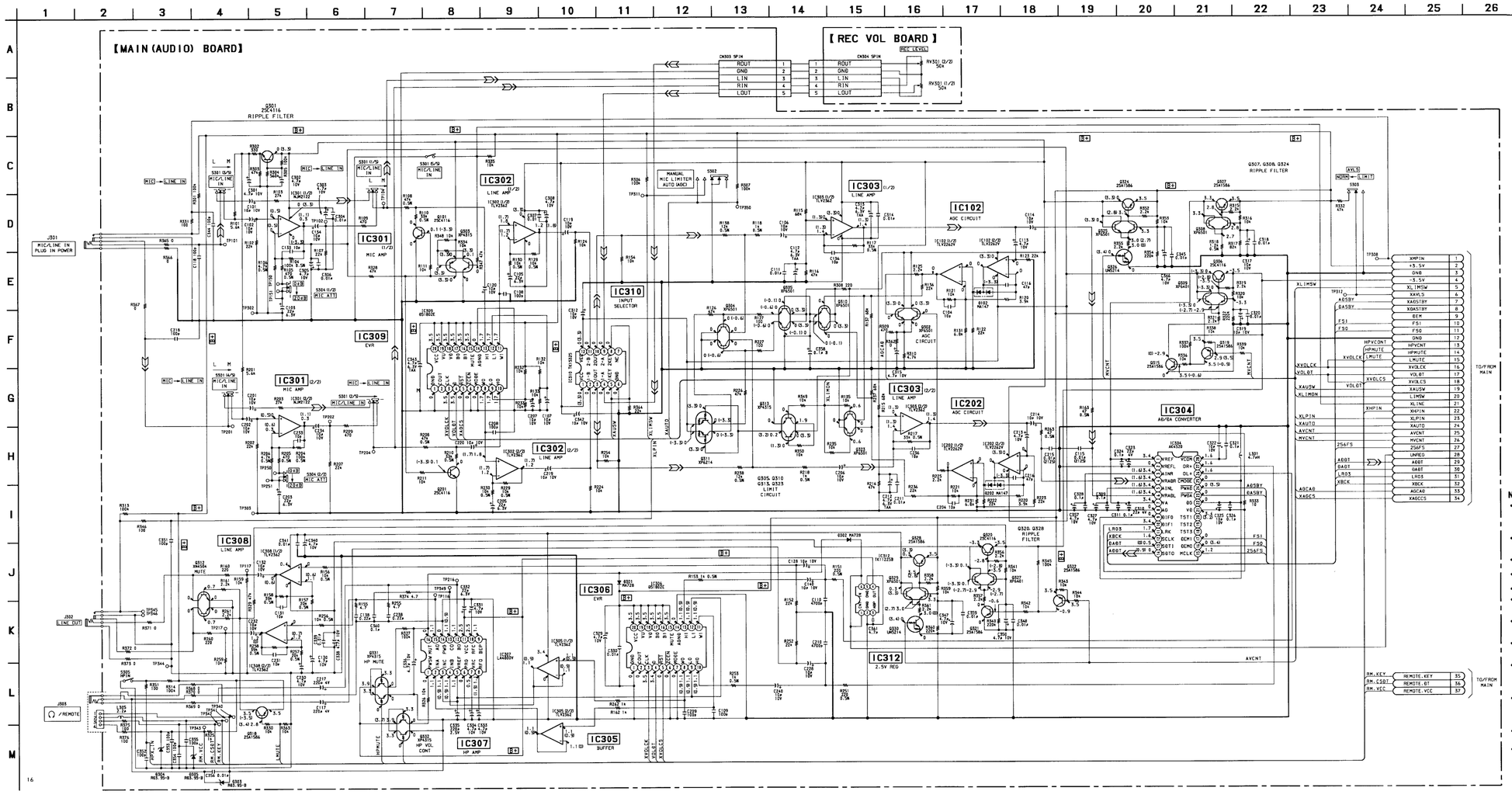

4-7. IC PIN FUNCTION

• IC506 CXD2607BR

Pin No.	Pin Name	I/O	Description
1	Vpp	O	+5v
2	A10	O	External RAM address input.
3	A11	—	External RAM address input.
4	A12	O	External RAM address input.
5	A13	O	External RAM address input.
6	A14	O	External RAM address input.
7	XWE	O	External RAM write enable signal output.
8	WOE	O	External RAM output enable signal output.
9	XEAN	O	External addressing enable signal output.
10	TST1	I	Test input, fixed to "L".
11	XT10	O	X'tal oscillator circuit -1 output (not used).
12	XT11	I	X'tal oscillator circuit -1 input (not used).
13	Vss	—	GND.
14	XRST	I	Reset input. Reset at "L".
15	CLKO	O	System clock output (Frequency is 4.9152 MHz when SELC = "L", 8.192 MHz when SELC = "H").
16	MINT	O	* 1 control byte (1). Q code decode (music interval detection) output when bit 1 = "L", BCK clock output from RX-PLL when bit 1 = "H").
17	ATSY	I	ATF sync signal input.
18	MCLK	O	Channel clock (fch) output.
19	DREF	O	Signal output with duty 50 at SBSY rate.
20	SBPM	O	Control byte (1). Data transfer monitoring signal output with microprocessor when bit 1 = "L" (Transfer is enabled at "L"), f256 clock output from RX-PLL when bit 1 = "H").
21	EXCK	I	Clock input for data transfer with microprocessor.
22	SDSI	I	Serial data input from microprocessor.
23	SDSO	O	Serial data output to microprocessor.
24	SBSY	O	Frame cycle signal output for data transfer with microprocessor.
25	RFPL	O	PLL clock divided-by-5880 output.
26	CCLK	O	9.8304 MHz output when SELC = "L", 12.288 MHz output when SELC = "H".
27	MUTE	O	Mute input, mute at "H". REC monitor sound is not muted.
28	MUTM	O	Mute monitor. The mute status is indicated by "H".
29	UNLK	O	RXPLL lock monitor signal output. Indicates the RXPLL is locked.
30	RFCT	I	Playback RF signal control (RF signal is valid at "L", RF signal is invalid at "H".)
31	SYMN	O	Monitor signal indicating result of CI check which supports RF.
32	SELB	I	Oscillating frequency selection signal input.
33	PLCK	O	Control byte (1). RFPLL clock output when bit 1 = "L", f128 clock output from RX-PLL when bit 1 = "H").
34	TST2	I	Test terminal, fixed to "L".
35	RFDT	I	Playback RF signal input.
36	XCS	I	Chip select input for data transfer with microprocessor. Transfer enable at "L".
37	SWP	I	RF switching pulse. "A" track at "L". "B" track at "H".
38	Vss	—	GND.
39	PIPC	O	ATF pilot signal of wiring signal/identification signal output. Pilot signal at "H".
40	REPB	O	REC/PB discriminating signal input. REC state at "H".
41	REDT	O	Wiring signal output.
42	TST4	I	Test terminal, fixed to "L".
43	PDO	O	Phase comparator output for RXPLL.
44	SELC	I	Oscillating frequency selection signal input.
45	MUTA	I	Mute input, mute at "H". REC monitor sound is also muted.
46	PLCO	I	External VCO clock input of RXPLL. (512 fs reference).
47	PLVR	O	Phase comparator signal output for RXPLL. (2 fs generated from PLL clock).
48	PLRF	O	Phase comparator signal output for RXPLL. (2 fs of rxx sync detection signal).
49	MSSL	I	Master mode/slave mode select. Master at "H".
50	RX	I	Digital interface signal input.

Pin No.	Pin Name	I/O	Description
51	Vpp	—	+5 v.
52	TX	O	Digital interface signal output.
53	SELA	I	Oscillating frequency selection signal input.
54	EXSY	I/O	External sync signal input/output. Normally connected to EXSN.
55	EXSN	I/O	External sync signal input/output. Normally connected to EXSY.
56	F128	I/O	128 fs signal/256 fs signal during double speed input/output.
57	F256	O	256 fs signal/512 fs signal during double speed input/output.
58	F512	O	512 fs signal output.
59	ADLF	I	LSB/MSB first of ADDT, ADDI and ADDN serial data select input. LSB first at "H".
60	DALF	I	LSB/MSB first of DADT and DADO serial data select input. LSB first at "H".
61	XT2O	O	X'tal oscillator circuit-2 output. 22.579 MHz.
62	XT2I	I	X'tal oscillator circuit-2 input.
63	Vss	—	GND.
64	XT30	O	X'tal oscillator circuit-3 output. 24.576 MHz.
65	XT31	I	X'tal oscillator circuit-3 input.
66	PSEN	I	F128, BCK and LRCK input;output select input. Output at "H".
67	LR03	O	Inverted signal of LR02.
68	LR02	O	Control byte (1). 16BCK delay signal of LRCK when bit 1 = "L", LRCK clock output from RX-PLL when bit 1 = "H".
69	LR01	O	15BCK delay signal of LRCK.
70	LRCK	I/O	Fs signal/2 fs signal during double speed input/output.
71	WCK	O	2 fs signal/4 fs signal during double speed input/output.
72	XBCK	O	Inverted signal output of BCK.
73	BCK	I/O	64 fs signal/128 fs signal during double speed input/output.
74	ADDT	I	AD serial data input.
75	DADT	O	DA serial data input.
76	DADO	I	Audio data input for digital output. (Connected to DADT normally).
77	ADDI	O	Digital in audio data output.
78	ADDN	I	Audio data input for DIGITAL IN. (Connected to ADDI normally).
79	ERRI	I	Validity flag data input for digital out. (Connected to ERRF normally).
80	ERRF	O	Error data plug/data output of DADT data. Error data at "H".
81	MNTG	O	Indicates that the error correction status monitor data is being output to D7 to D0 at "H".
82	D7	I/O	External RAM data input/output (MSB).
83	D6	I/O	External RAM data input/output.
84	D5	I/O	External RAM data input/output.
85	D4	I/O	External RAM data input/output.
86	D3	I/O	External RAM data input/output.
87	D2	I/O	External RAM data input/output.
88	Vss	—	GND.
89	D1	I/O	External RAM data input/output.
90	D0	I/O	External RAM data input/output. (LSB).
91	A00	I/O	External RAM data input/output.
92	A01	0	External RAM data input/output.
93	A02	0	External RAM data input/output.
94	A03	0	External RAM data input/output.
95	A04	0	External RAM data input/output.
96	A05	0	External RAM data input/output.
97	A06	0	External RAM data input/output.
98	A07	0	External RAM data input/output.
99	A08	0	External RAM address output.
100	A09	0	External RAM address output.

• **IC505 CXP87532-035-R**

Pin No.	Pin Name	I/O	Description
1	TURBO	O	Capstan turbo (Power on = for Capstan high speed rotation).
2	CAPDIR	O	Capstan direction: reverse.
3	CMR–	—	Control motor -.
4	CMR+	O	Control motor +.
5	CMRSTBY	O	Control motor standby.
6	HPVCNT	O	Headphone power on.
7	XADSTBY	O	A/D converter STANDBY.
8	XDASTBY	O	D/A converter standby.
9	VOLDT	O	VOL. & AGC EVR, REC current adjustment - D/A converter data.
10	XVOLCK	I	VOL. & AGC EVR, REC current adjustment - D/A converter clock.
11	XVOLCS	O	VOLUME EVR chip select.
12	AVCONT	I	Audio PB block power control output. (on at "H").
13	FS0	—	DA converter de-emphasis SW0.
14	XVCOSB	I	Analog PLL VCO standby.
15	FS1	O	DA converter de-emphasis SW1.
16	MVCNT	O	Audio record block power control output. (on at "H").
17	XLIMON	I	MIC limiter on.
18	SBPM	O	SBPM input (from CXD2607).
19	DALD	O	REC current adjust D/A converter data latch output.
20	XAGCCS	O	AGC EVR chip select output.
21	XLINE	I	MIC/line select SW (low = line).
22	XHPIN	I	Headphone plug SW detection.
23	XLPIN	O	Line out plug SW detection.
24	XAUTO	O	REC mode manual/auto select SW (key input) (low: AUTO).
25	XAVLS	O	AVLS SW input.
26	XLIMSW	O	Limiter SW input.
27	XMPIN	O	MIC plug SW input.
28	ACDC	O	AC/DC SW input; BATTERY IN = high.
29	THIN	O	Thinner tape identification SW input.
30	RECINH	I	REC inhibit recognition SW input.
31	XCASIN	O	Cassette existence SW input.
32	XCASLK	I	Cassette compartment lock SW input.
33	XRE3	O	Rotary encoder SW input-3.
34	XRE2	I	Rotary encoder SW input-2.
35	XRE1	I	Rotary encoder SW input-1.
36	XRE0	I	Rotary encoder SW input-0.
37	GND	I	GND.
38	XRESET	—	Reset input.
39	VSS	O	GND.
40	XTAL	O	11.2896 MHz clock.
41	EXTAL	O	11.2896 MHz clock.
42	XPWMSTBY	I	PWM driver standby.
43	XCAPSTBY	O	Capstan driver standby.
44	XDRMSTBY	I	Drum driver standby.
45	DRMBR	I	Drum brake.
46	SBSY	I	CXD2607 (DSP) sub-sync signal input.
47	S11	O	CXD2607/NVRAM communication data input.
48	S01	O	CXD2607/NVRAM communication data output.
49	XSCK1	I	CXD2607/NVRAM communication clock input.
50	CS0	I	GND.

Pin No.	Pin Name	I/O	Description
51	SI0	I	System controller communication data input.
52	SO0	O	System controller communication data output.
53	XSCK0	I	System controller communication data clock.
54	AVSS	—	Built-in A/D converter, reference GND.
55	AVREF	—	Built-in A/D converter, reference power supply.
56	AVDD	—	Built-in A/D converter power supply. (connected to VDD).
57	RFENV	I	RF envelope input.
58	DEW	I	Dew (condensation) sensor input.
59	TEND	I	Tape-top side end sensor signal input.
60	SEND	I	Tape-end side end sensor signal input.
61	BATT	I	Battery voltage input.
62	AGCAD	I	Audio signal detection voltage input for AGC.
63	SCC	I	Pull down.
64	ATFPLT	I	ATF pilot signal input.
65	SRLFG	I	S-side reel FG.
66	TRLFG	I	T-side reel FG.
67	CAPFG	I	Capstan FG.
68	DRMFG	I	Drum FG.
69	DRMPG	I	Drum PG.
70	DREF	I	Drum reference (L = A ch).
71	MUTEM	I	CXD2607 (DSP) mute monitor input.
72	XFS48	I	Fs switch input 48 kHz.
73	XFS44	I	Fs switch input 44.1 kHz.
74	XFS32	I	Fs switch input 32 kHz.
75	MCLK	I	Channel clock input.
76	RFDT	I	RF signal.
77	XNVCS	O	NVRAM chip select (High output during reset).
78	NVRST	O	NVRAM reset (High output during reset).
79	XTURVO	O	Capstan turbo inverted output.
80	ATFAGC	O	ATF gain control PWM out.
81	CAPPWM	O	Capstan motor control PWM output.
82	DRMPWM	O	Drum motor control PWM output.
83	SYMN	I	C1 syndrome monitor input.
84	MINT	I	Music top signal input after CD-Q decode.
85	VDD	I	VDD connection.
86	VSS	—	GND.
87	VDD	—	VDD.
88	—	—	No connection.
89	ATSY	O	ATF-SYNC (ATFS2) timing signal.
90	XAUSW	O	REC mode AUTO select switch (output) (L: AUTO).
91	XHPMUTE	O	Headphone mute output.
92	LMUTE	O	Line mute output.
93	DMUTE	O	Digital mute output.
94	SWP	O	SWP output. (L = A ch/H = B ch).
95	ENDLDS	O	S-reel side end-sensor LED ON.
96	ENDLDT	O	T-reel side end-sensor LED ON.
97	RLLDS	O	S-reel FG sensor LED ON.
98	RLLDT	O	T-reel FG sensor LED ON.
99	XSYSREQ	O	System controller communication request output.
100	XDSPRST	O	CXD2607 (DSP) reset input.

SECTION 5
EXPLODED VIEWS

Note:

- -XX, -X mean standardized parts, so they may have some differences from the original one.
- Items marked "*" are not stocked since they are seldom required for routine service. Some delay should be anticipated when ordering these items.
- The mechanical parts with no reference number in the exploded views are not supplied.
- Hardware (# mark) list and accessories and packing materials are given in the last of this parts list.

The components identified by mark ⚠ or dotted line with mark ⚠ are critical for safety. Replace only with part number specified.

Les composants identifiés par une marque ⚠ sont critiques pour la sécurité. Ne les remplacer que par une pièce portant le numéro spécifié.

5-1. CABINET SECTION

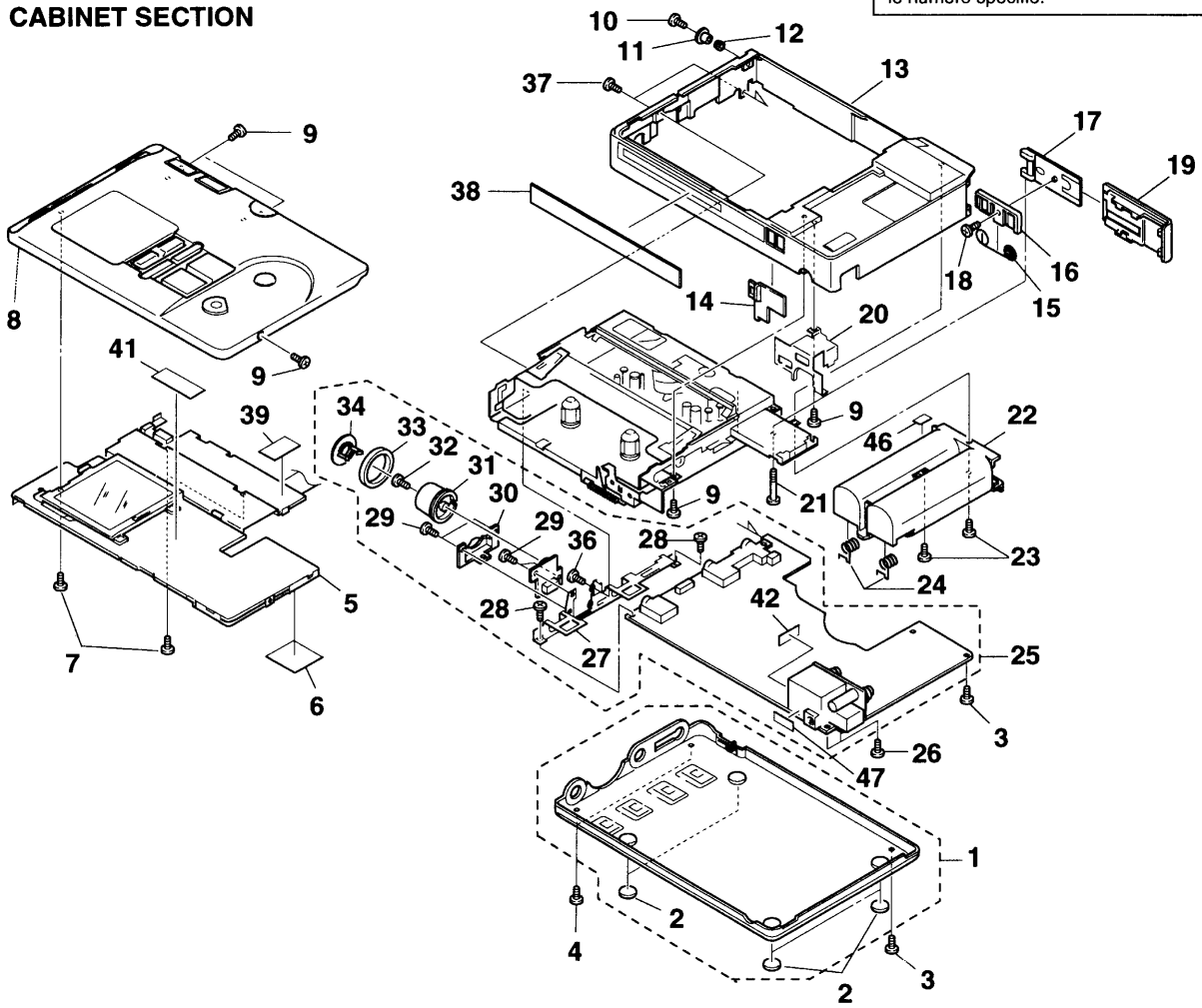

Ref. No.	Part No.	Description	Remarks
1	A-3311-601-A	PANEL ASSY, LOWER	
2	3-387-476-01	FOOT, RUBBER	
3	3-348-998-81	SCREW (M1.4X2.5)	
4	3-704-197-02	SCREW (M1.4X1.6) LOCKING	
5	1-475-171-11	PC BOARD UNIT, SYSTEM CONTROL	
6	4-992-964-01	COVER, BATTERY	
7	3-375-114-21	SCREW (M1.7X2.5)	
8	X-4948-447-1	LID ASSY, CASSETTE	
9	3-704-197-01	SCREW (M1.4X1.6), LOCKING	
10	3-704-197-31	SCREW (M1.4X3.0), LOCKING	
11	4-990-722-01	SPACER	
12	3-362-469-01	CUSHION, MD FITTING	
13	4-990-742-01	CABINET	
14	4-992-335-01	KNOB (OPEN)	
15	4-990-735-01	TERMINAL (+,-), BATTERY	
16	4-990-734-01	HOLDER, BATTERY TERMINAL	
17	4-990-736-01	BRACKET (BATTERY CASE LID)	
18	3-704-197-12	SCREW (M1.4X2.0), LOCKING	
19	4-990-733-01	LID, BATTERY CASE	
20	4-992-334-01	REINFORCEMENT (DC JACK)	

Ref. No.	Part No.	Description	Remarks
21	4-990-723-01	SCREW (M1.4), STEP	
22	4-992-333-01	CASE, BATTERY	
23	3-704-197-21	SCREW (M1.4X2.5), LOCKING	
24	4-992-336-01	TERMINAL (-), BATTERY	
25	A-3293-414-A	MAIN BOARD ASSY, COMPLETE	
26	3-335-797-21	SCREW (M1.4X3), TOOTHED LOCK	
* 27	4-990-745-01	BRACKET (JACK)	
28	3-335-797-01	SCREW (M1.4X2), TOOTHED LOCK	
29	3-704-197-01	SCREW (M1.4X1.6) LOCKING	
30	4-990-748-01	ORNAMENT (REC VOL)	
31	4-990-744-01	HOLDER (REC VOL)	
32	7-627-852-27	+P 1.7X3	
33	4-990-747-01	RING, REC (VOL)	
34	4-990-746-01	KNOB (REC VOL)	
36	3-704-246-01	SCREW (P1.4X1.6)	
37	4-963-883-31	SCREW (M1.4), PRECISION PAN	
38	4-990-743-01	WINDOW, CASSETTE	
39	4-992-967-01	SHEET (COVER)	
41	4-992-968-01	SHEET (BUTTON)	
42	4-992-969-01	SHEET (DD)	
46	4-994-599-01	SHEET (CM)	
47	4-994-598-01	SHEET (DC)	

5-2. CASSETTE HOLDER SECTION

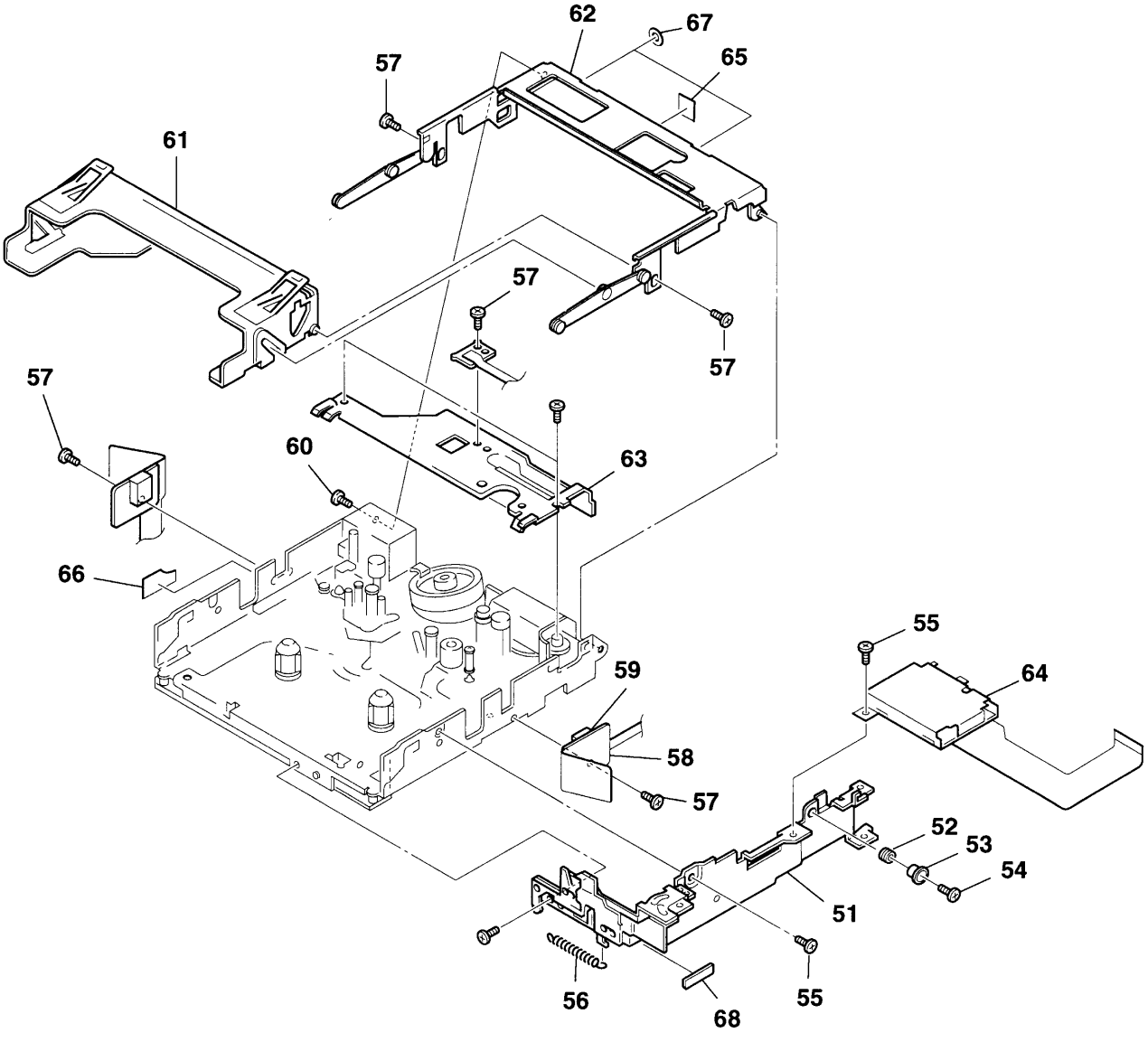

Ref. No.	Part No.	Description	Remarks	Ref. No.	Part No.	Description	Remarks
51	X-4948-445-1	BRACKET ASSY, MD		60	3-387-566-01	SCREW, STEP	
52	3-362-469-01	CUSHION, MD FITTING		61	X-3373-745-1	HOLDER (CASSETTE) ASSY	
53	4-990-722-01	SPACER		62	X-4948-667-1	CHASSIS ASSY	
54	3-704-197-31	SCREW (M1.4X3.0), LOCKING		* 63	3-013-472-01	OPENER, LID	
55	3-331-047-01	SCREW (M1.4X1.4),SPECIAL HEAD		64	1-801-766-11	RF MODULE	
56	4-992-358-01	SPRING, TENSION		65	3-330-681-01	SHEET, LUMILER	
57	3-349-825-01	SCREW		66	4-992-966-01	SHEET (MD)	
58	1-665-830-11	PC BOARD, MOTOR FLEXIBLE		67	4-993-509-01	WASHER (CB)	
59	8-719-031-97	DIODE NJL5134KL		68	4-994-597-01	SHEET (RT)	

5-3. MACHANISM SECTION 1 (MT-D100-128)

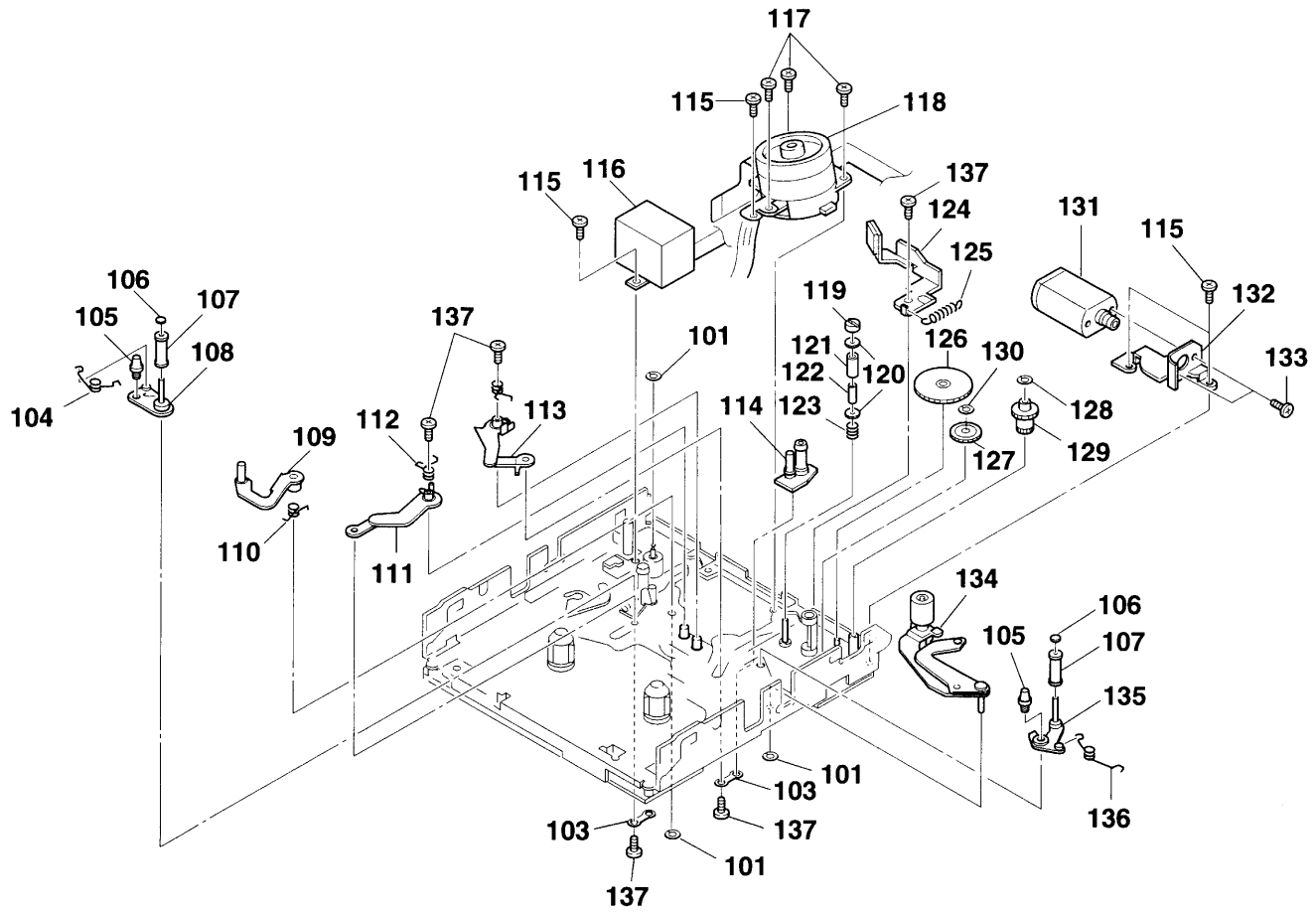

Ref. No.	Part No.	Description	Remarks
101	3-321-393-01	WASHER, STOPPER	
103	3-013-454-01	LEVER (LOADING U)	
104	3-013-477-01	SPRING (SF)	
105	3-360-817-01	SHAFT (CASSETTE)	
106	3-315-414-00	WASHER	
107	3-013-465-01	ROLLER (F), GUIDE	
108	X-3373-733-1	LEVER (SF) ASSY	
109	X-3373-737-1	LEVER (TENSION) ASSY	
110	3-013-479-01	SPRING (TENSION)	
111	X-3373-735-1	LEVER (LOADING.S) ASSY	
112	3-013-476-01	SPRING (LOADING)	
113	X-3373-736-1	LEVER (LOADING.T) ASSY	
114	X-3373-720-1	GUIDE (T) ASSY, SLANT	
115	3-331-047-01	SCREW (M1.4X1.4),SPECIAL HEAD	
116	1-475-190-11	INVERTER UNIT	
117	3-704-197-11	SCREW (M1.4X2.0), LOCKING	
118	8-839-042-11	DRUM ASSY DOU-28A/J-N	
119	3-337-605-01	NUT, ADJUSTMENT	

Ref. No.	Part No.	Description	Remarks
120	3-013-448-01	FLANGE	
121	3-013-447-01	ROLLER (GUIDE)	
122	3-013-469-01	COLLAR (GUIDE)	
123	3-013-488-01	SPRING (ROTARY ROLLER), COIL	
124	X-3373-739-1	LEVER (CLEANER) ASSY	
125	3-013-486-01	SPRING (CLEANER), TENSION	
126	3-013-460-01	GEAR (MODE B)	
127	3-013-461-01	GEAR (MODE C)	
128	4-992-239-01	WASHER (A)	
129	3-013-459-01	GEAR (MODE A)	
130	3-315-384-11	WASHER, STOPPER	
131	1-698-959-11	MOTOR, DC	
132	3-013-455-01	BRACKET (MOTOR)	
133	7-627-455-08	SCREW, PRECISION +K 1.4X1.4	
134	X-3373-728-1	ROLLER ASSY, PINCH	
135	X-3373-734-1	LEVER (TF) ASSY	
136	3-013-478-01	SPRING (TF)	
137	3-349-825-53	SCREW	

5-4. MACHANISM SECTION 2 (MT-D100-128)

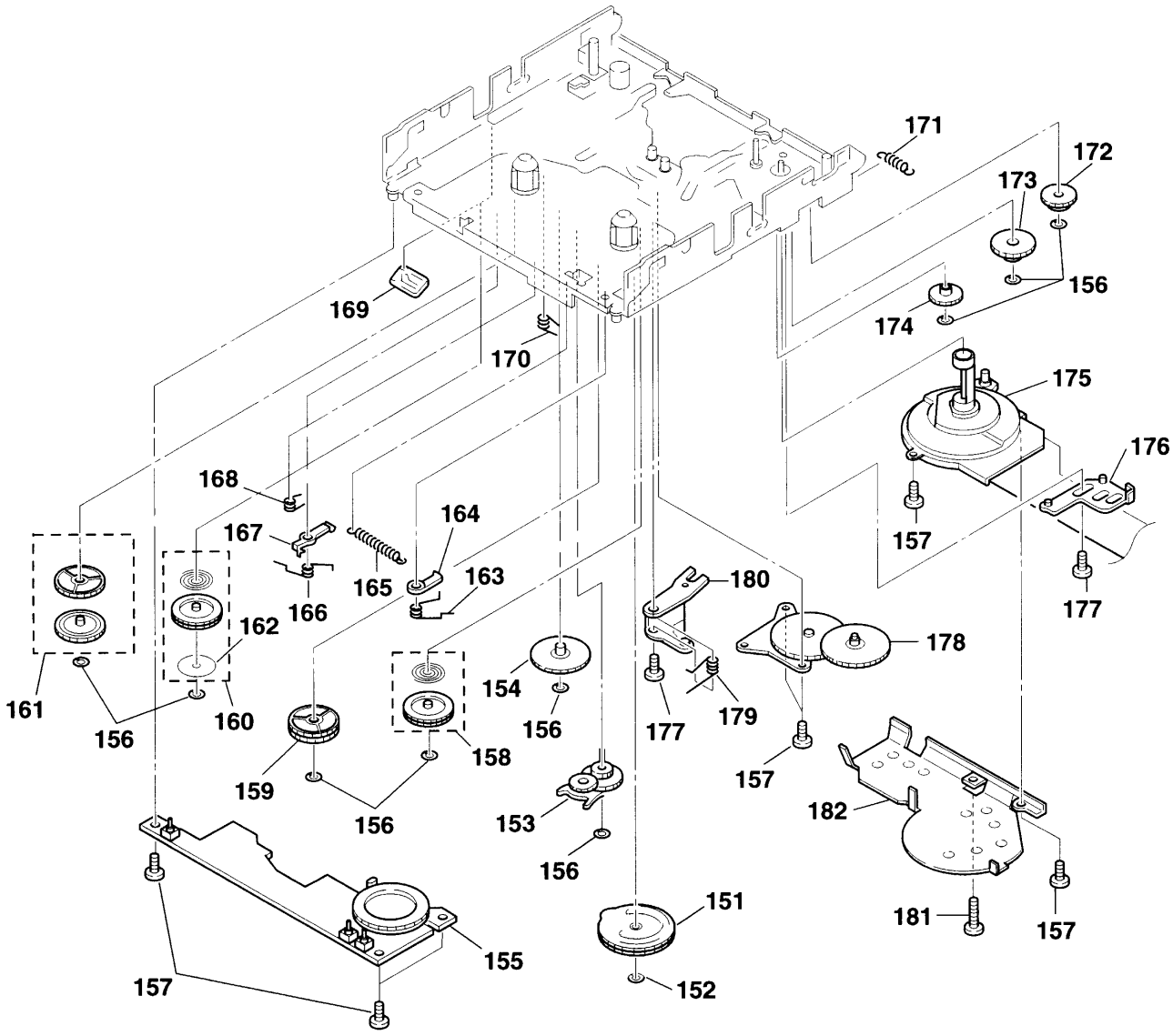

Ref. No.	Part No.	Description	Remarks
151	3-013-452-01	GEAR, CAM	
152	3-315-384-11	WASHER, STOPPER	
153	X-3373-716-1	LEVER (FF/REW) ASSY	
154	3-013-456-01	GEAR (C)	
155	1-475-193-11	PC BOARD UNIT, SENSOR	
156	3-321-393-01	WASHER, STOPPER	
157	3-331-047-01	SCREW (M1.4X1.4),SPECIAL HEAD	
158	X-3373-740-1	LIMITTER (F) ASSY	
159	X-3373-743-11	LIMITTER (MG REEL) ASSY	
160	X-3373-741-1	LIMITTER (F REEL) ASSY	
161	X-3373-742-1	LIMITTER (MG) ASSY	
162	3-013-442-01	REFLECTOR (REEL)	
163	3-013-483-01	SPRING (BRAKE T)	
* 164	3-013-467-01	LEVER (BRAKE T)	
165	3-013-484-01	SPRING (LEVER BRAKE), COIL	
166	3-013-482-01	SPRING (BRAKE S)	
* 167	3-013-466-01	LEVER (BRAKE S)	
168	4-992-343-01	SPRING (BRAKE CTR)	
* 169	3-013-468-01	LEVER (F-BT)	
170	3-013-481-01	SPRING (GEAR PRESS)	
171	3-013-487-01	SPRING(TENSION RETURN),TENSION	
172	3-013-462-01	GEAR (MODE D)	
173	3-013-463-01	GEAR (MODE E)	
174	3-013-464-01	GEAR (MODE F)	
175	1-698-958-11	MOTOR, CAPSTAN	
176	X-3373-744-1	LEVER (CLEANER RELEASE) ASSY	
177	3-349-825-01	SCREW	
178	X-3373-715-1	CHASSIS (GEAR) ASSY	
179	3-013-480-01	SPRING (T LOCK)	
180	X-3373-738-1	LEVER (LOADING.CAM) ASSY	
181	3-704-252-41	SCREW (M1.4X6)	
182	4-992-344-01	COVER MOTOR	

SECTION 6
ELECTRICAL PARTS LIST

MAIN

Note:

When indicating parts by reference number, please include the board name.

The components identified by mark ⚠ or dotted line with mark ⚠ are critical for safety. Replace only with part number specified.

Les composants identifiés par une marque ⚠ sont critiques pour la sécurité. Ne les remplacer que par une pièce portant le numéro spécifié.

- Due to standardization, replacements in the parts list may be different from the parts specified in the diagrams or the components used on the set.
- -XX, -X mean standardized parts, so they may have some difference from the original one.
- Items marked "*" are not stocked since they are seldom required for routine service. Some delay should be anticipated when ordering these items.
- CAPACITORS:
  uF: μF
- RESISTORS
  All resistors are in ohms.
  METAL: metal-film resistor
  METAL OXIDE: Metal Oxide-film resistor
  F: nonflammable
- COILS
  uH: μH
- SEMICONDUCTORS
  In each case, u: μ, for example:
  uA...: μA... , uPA... , μPA... , uPB... , μPB... , uPC... , μPC... , uPD..., μPD...

Ref. No.	Part No.	Description			Remarks
	A-3293-414-A	MAIN BOARD, COMPLETE			
		**********			
	1-163-031-11	CERAMIC CHIP	0.01μF		50V
	3-703-929-01	SHEET, LUMILER			
	3-335-797-01	SCREW (M1.4X2), TOOTHED LOCK			
	3-365-630-21	SCREW (M1.4)			
	3-704-197-01	SCREW (M1.4X1.6), LOCKING			
	4-990-744-01	HOLDER (REC VOL)			
*	4-990-745-01	BRACKET (JACK)			
	4-990-748-01	ORNAMENT (REC VOL)			
	4-994-598-01	SHEET (DC)			
	7-627-852-27	+P 1.7X3			
		< CAPACITOR >			
C101	1-104-851-11	TANTAL. CHIP	10uF	20%	10V
C102	1-104-851-11	TANTAL. CHIP	10uF	20%	10V
C103	1-104-852-11	TANTAL. CHIP	22uF	20%	6.3V
C104	1-162-915-11	CERAMIC CHIP	10PF	0.5PF	50V
C105	1-104-852-11	TANTAL. CHIP	22uF	20%	6.3V
C106	1-104-851-11	TANTAL. CHIP	10uF	20%	10V
C107	1-104-851-11	TANTAL. CHIP	10uF	20%	10V
C108	1-162-927-11	CERAMIC CHIP	100PF	5%	50V
C109	1-162-927-11	CERAMIC CHIP	100PF	5%	50V
C110	1-117-223-11	FILM CHIP	0.0047uF	2%	16V
C111	1-162-970-11	CERAMIC CHIP	0.01uF	10%	25V
C112	1-109-935-11	TANTAL. CHIP	4.7uF	20%	6.3V
C113	1-135-210-11	TANTALUM CHIP	4.7uF	20%	10V
C114	1-104-851-11	TANTAL. CHIP	10uF	20%	10V
C115	1-107-827-11	FILM CHIP	0.01uF	2%	16V
C116	1-162-923-11	CERAMIC CHIP	47PF	5%	50V
C117	1-124-576-11	ELECT	220uF	20%	4V
C118	1-162-927-11	CERAMIC CHIP	100PF	5%	50V
C119	1-104-851-11	TANTAL. CHIP	10uF	20%	10V
C120	1-104-851-11	TANTAL. CHIP	10uF	20%	10V
C128	1-104-851-11	TANTAL. CHIP	10uF	20%	10V
C130	1-135-210-11	TANTALUM CHIP	4.7uF	20%	10V
C131	1-162-915-11	CERAMIC CHIP	10PF	0.5PF	50V
C132	1-104-851-11	TANTAL. CHIP	10uF	20%	10V
C133	1-162-915-11	CERAMIC CHIP	10PF	0.5PF	50V
C134	1-104-851-11	TANTAL. CHIP	10uF	20%	10V
C136	1-162-915-11	CERAMIC CHIP	10PF	0.5PF	50V
C138	1-164-489-11	CERAMIC CHIP	0.22uF	10%	16V
C140	1-104-851-11	TANTAL. CHIP	10uF	20%	10V
C201	1-104-851-11	TANTAL. CHIP	10uF	20%	10V
C202	1-104-851-11	TANTAL. CHIP	10uF	20%	10V
C203	1-104-852-11	TANTAL. CHIP	22uF	20%	6.3V
C204	1-162-915-11	CERAMIC CHIP	10PF	0.5PF	50V
C205	1-104-852-11	TANTAL. CHIP	22uF	20%	6.3V
C206	1-104-851-11	TANTAL. CHIP	10uF	20%	10V
C207	1-104-851-11	TANTAL. CHIP	10uF	20%	10V
C208	1-162-927-11	CERAMIC CHIP	100PF	5%	50V
C209	1-162-927-11	CERAMIC CHIP	100PF	5%	50V
C210	1-117-223-11	FILM CHIP	0.0047uF	2%	16V
C211	1-162-970-11	CERAMIC CHIP	0.01uF	10%	25V
C212	1-109-935-11	TANTAL. CHIP	4.7uF	20%	6.3V
C213	1-135-210-11	TANTALUM CHIP	4.7uF	20%	10V
C214	1-104-851-11	TANTAL. CHIP	10uF	20%	10V
C215	1-107-827-11	FILM CHIP	0.01uF	2%	16V
C216	1-162-923-11	CERAMIC CHIP	47PF	5%	50V
C217	1-124-576-11	ELECT	220uF	20%	4V
C218	1-162-927-11	CERAMIC CHIP	100PF	5%	50V
C219	1-104-851-11	TANTAL. CHIP	10uF	20%	10V
C220	1-104-851-11	TANTAL. CHIP	10uF	20%	10V
C228	1-104-851-11	TANTAL. CHIP	10uF	20%	10V
C230	1-135-210-11	TANTALUM CHIP	4.7uF	20%	10V
C231	1-162-915-11	CERAMIC CHIP	10PF	0.5PF	50V
C232	1-104-851-11	TANTAL. CHIP	10uF	20%	10V
C233	1-162-915-11	CERAMIC CHIP	10PF	0.5PF	50V
C234	1-104-851-11	TANTAL. CHIP	10uF	20%	10V
C236	1-162-915-11	CERAMIC CHIP	10PF	0.5PF	50V
C238	1-164-489-11	CERAMIC CHIP	0.22uF	10%	16V
C240	1-104-851-11	TANTAL. CHIP	10uF	20%	10V
C301	1-135-210-11	TANTALUM CHIP	4.7uF	20%	10V
C302	1-135-210-11	TANTALUM CHIP	4.7uF	20%	10V
C303	1-135-210-11	TANTALUM CHIP	4.7uF	20%	10V
C304	1-162-970-11	CERAMIC CHIP	0.01uF	10%	25V
C305	1-135-210-11	TANTALUM CHIP	4.7uF	20%	10V
C306	1-162-970-11	CERAMIC CHIP	0.01uF	10%	25V
C307	1-162-970-11	CERAMIC CHIP	0.01uF	10%	25V
C308	1-135-210-11	TANTALUM CHIP	4.7uF	20%	10V
C309	1-164-156-11	CERAMIC CHIP	0.1uF		25V
C310	1-104-847-11	TANTAL. CHIP	22uF	20%	4V
C311	1-164-156-11	CERAMIC CHIP	0.1uF		25V
C312	1-104-851-11	TANTAL. CHIP	10uF	20%	10V
C313	1-109-935-11	TANTAL. CHIP	4.7uF	20%	6.3V
C314	1-162-970-11	CERAMIC CHIP	0.01uF	10%	25V
C315	1-135-210-11	TANTALUM CHIP	4.7uF	20%	10V
C317	1-104-851-11	TANTAL. CHIP	10uF	20%	10V
C318	1-162-970-11	CERAMIC CHIP	0.01uF	10%	25V
C319	1-104-851-11	TANTAL. CHIP	10uF	20%	10V
C320	1-162-970-11	CERAMIC CHIP	0.01uF	10%	25V
C321	1-164-156-11	CERAMIC CHIP	0.1uF		25V
C322	1-104-851-11	TANTAL. CHIP	10uF	20%	10V
C323	1-104-847-11	TANTAL. CHIP	22uF	20%	4V
C324	1-164-156-11	CERAMIC CHIP	0.1uF		25V
C325	1-104-851-11	TANTAL. CHIP	10uF	20%	10V
C326	1-164-156-11	CERAMIC CHIP	0.1uF		25V
C327	1-135-210-11	TANTALUM CHIP	4.7uF	20%	10V
C328	1-164-156-11	CERAMIC CHIP	0.1uF		25V

MAIN

Ref. No.	Part No.	Description			Remarks
C329	1-135-210-11	TANTALUM CHIP	4.7uF	20%	10V
C330	1-162-970-11	CERAMIC CHIP	0.01uF	10%	25V
C331	1-135-210-11	TANTALUM CHIP	4.7uF	20%	10V
C332	1-104-852-11	TANTAL. CHIP	22uF	20%	6.3V
C333	1-135-210-11	TANTALUM CHIP	4.7uF	20%	10V
C334	1-135-210-11	TANTALUM CHIP	4.7uF	20%	10V
C335	1-109-930-11	TANTAL. CHIP	220uF	20%	2.5V
C336	1-135-210-11	TANTALUM CHIP	4.7uF	20%	10V
C338	1-135-210-11	TANTALUM CHIP	4.7uF	20%	10V
C339	1-162-970-11	CERAMIC CHIP	0.01uF	10%	25V
C340	1-135-210-11	TANTALUM CHIP	4.7uF	20%	10V
C341	1-162-970-11	CERAMIC CHIP	0.01uF	10%	25V
C342	1-104-851-11	TANTAL. CHIP	10uF	20%	10V
C343	1-109-935-11	TANTAL. CHIP	4.7uF	20%	6.3V
C344	1-162-927-11	CERAMIC CHIP	100PF	5%	50V
C345	1-162-970-11	CERAMIC CHIP	0.01uF	10%	25V
C346	1-135-210-11	TANTALUM CHIP	4.7uF	20%	10V
C347	1-135-210-11	TANTALUM CHIP	4.7uF	20%	10V
C348	1-162-970-11	CERAMIC CHIP	0.01uF	10%	25V
C350	1-135-210-11	TANTALUM CHIP	4.7uF	20%	10V
C351	1-162-927-11	CERAMIC CHIP	100PF	5%	50V
C352	1-162-927-11	CERAMIC CHIP	100PF	5%	50V
C353	1-162-927-11	CERAMIC CHIP	100PF	5%	50V
C354	1-162-927-11	CERAMIC CHIP	100PF	5%	50V
C355	1-162-927-11	CERAMIC CHIP	100PF	5%	50V
C356	1-162-970-11	CERAMIC CHIP	0.01uF	10%	25V
C357	1-135-210-11	TANTALUM CHIP	4.7uF	20%	10V
C358	1-163-077-00	CERAMIC CHIP	0.1uF	10%	25V
C359	1-162-970-11	CERAMIC CHIP	0.01uF	10%	25V
C360	1-164-004-11	CERAMIC CHIP	0.1uF	10%	25V
C361	1-117-720-91	CERAMIC CHIP	4.7uF		10V
C501	1-162-927-11	CERAMIC CHIP	100PF	5%	50V
C502	1-164-346-11	CERAMIC CHIP	1uF		16V
C503	1-135-259-11	TANTAL. CHIP	10uF	20%	6.3V
C504	1-162-966-11	CERAMIC CHIP	0.0022uF	10%	50V
C505	1-162-970-11	CERAMIC CHIP	0.01uF	10%	25V
C506	1-164-156-11	CERAMIC CHIP	0.1uF		25V
C507	1-135-091-00	TANTALUM CHIP	1uF	20%	16V
C508	1-135-091-00	TANTALUM CHIP	1uF	20%	16V
C509	1-164-156-11	CERAMIC CHIP	0.1uF		25V
C510	1-164-156-11	CERAMIC CHIP	0.1uF		25V
C511	1-162-964-11	CERAMIC CHIP	0.001uF	10%	50V
C512	1-162-964-11	CERAMIC CHIP	0.001uF	10%	50V
C513	1-135-091-00	TANTALUM CHIP	1uF	20%	16V
C514	1-104-852-11	TANTAL. CHIP	22uF	20%	6.3V
C515	1-162-970-11	CERAMIC CHIP	0.01uF	10%	25V
C516	1-164-156-11	CERAMIC CHIP	0.1uF		25V
C517	1-135-091-00	TANTALUM CHIP	1uF	20%	16V
C518	1-162-967-11	CERAMIC CHIP	0.0033uF	10%	50V
C519	1-162-964-11	CERAMIC CHIP	0.001uF	10%	50V
C520	1-162-964-11	CERAMIC CHIP	0.001uF	10%	50V
C521	1-162-964-11	CERAMIC CHIP	0.001uF	10%	50V
C522	1-164-156-11	CERAMIC CHIP	0.1uF		25V
C523	1-164-156-11	CERAMIC CHIP	0.1uF		25V
C524	1-104-852-11	TANTAL. CHIP	22uF	20%	10V
C525	1-162-970-11	CERAMIC CHIP	0.01uF	10%	25V
C526	1-162-970-11	CERAMIC CHIP	0.01uF	10%	25V
C527	1-104-851-11	TANTAL. CHIP	10uF	20%	10V
C528	1-162-962-11	CERAMIC CHIP	470PF	10%	50V
C529	1-162-962-11	CERAMIC CHIP	470PF	10%	50V
C530	1-162-964-11	CERAMIC CHIP	0.001uF	10%	50V
C531	1-162-960-11	CERAMIC CHIP	220PF	10%	50V
C532	1-162-964-11	CERAMIC CHIP	0.001uF	10%	50V
C533	1-117-379-21	CAPACITOR	000000000	0	0
C535	1-117-379-21	CAPACITOR	000000000	0	0
C536	1-162-966-11	CERAMIC CHIP	0.0022uF	10%	50V
C537	1-135-091-00	TANTALUM CHIP	1uF	20%	16V
C538	1-162-964-11	CERAMIC CHIP	0.001uF	10%	50V
C539	1-162-960-11	CERAMIC CHIP	220PF	10%	50V
C540	1-162-964-11	CERAMIC CHIP	0.001uF	10%	50V
C541	1-117-379-21	CAPACITOR	000000000	0	0
C543	1-117-379-21	CAPACITOR	000000000	0	0
C544	1-162-979-11	CERAMIC CHIP	0.0027uF	10%	50V
C545	1-165-128-11	CERAMIC CHIP	0.22uF		16V
C546	1-165-128-11	CERAMIC CHIP	0.22uF		16V
C547	1-165-128-11	CERAMIC CHIP	0.22uF		16V
C548	1-164-156-11	CERAMIC CHIP	0.1uF		25V
C549	1-164-156-11	CERAMIC CHIP	0.1uF		25V
C550	1-164-156-11	CERAMIC CHIP	0.1uF		25V
C551	1-104-851-11	TANTAL. CHIP	10uF	20%	10V
C553	1-162-923-11	CERAMIC CHIP	47PF	5%	50V
C554	1-104-852-11	TANTAL. CHIP	22uF	20%	10V
C555	1-117-379-21	CAPACITOR	000000000	0	0
C557	1-104-852-11	TANTAL. CHIP	22uF	20%	10V
C559	1-104-852-11	TANTAL. CHIP	22uF	20%	10V
C560	1-164-156-11	CERAMIC CHIP	0.1uF		25V
C561	1-164-156-11	CERAMIC CHIP	0.1uF		25V
C562	1-115-169-11	TANTALUM	10uF	20%	6.3V
C563	1-162-970-11	CERAMIC CHIP	0.01uF	10%	25V
C564	1-135-259-11	TANTAL. CHIP	10uF	20%	6.3V
C565	1-104-852-11	TANTAL. CHIP	22uF	20%	10V
C568	1-115-169-11	TANTALUM	10uF	20%	6.3V
C569	1-164-156-11	CERAMIC CHIP	0.1uF		25V
C570	1-164-227-11	CERAMIC CHIP	0.022uF	10%	25V
C571	1-162-966-11	CERAMIC CHIP	0.0022uF	10%	50V
C572	1-164-227-11	CERAMIC CHIP	0.022uF	10%	25V
C573	1-164-227-11	CERAMIC CHIP	0.022uF	10%	25V
C574	1-162-966-11	CERAMIC CHIP	0.0022uF	10%	50V
C575	1-164-156-11	CERAMIC CHIP	0.1uF		25V
C576	1-164-156-11	CERAMIC CHIP	0.1uF		25V
C577	1-110-569-11	TANTAL. CHIP	47uF	20%	6.3V
C578	1-162-970-11	CERAMIC CHIP	0.01uF	10%	25V
C579	1-164-156-11	CERAMIC CHIP	0.1uF		25V
C580	1-104-851-11	TANTAL. CHIP	10uF	20%	10V
C583	1-164-156-11	CERAMIC CHIP	0.1uF		25V
C585	1-164-156-11	CERAMIC CHIP	0.1uF		25V
C586	1-164-156-11	CERAMIC CHIP	0.1uF		25V
C587	1-164-156-11	CERAMIC CHIP	0.1uF		25V
C588	1-115-169-11	TANTALUM	10uF	20%	6.3V
C589	1-164-156-11	CERAMIC CHIP	0.1uF		25V
C590	1-164-156-11	CERAMIC CHIP	0.1uF		25V
C591	1-115-169-11	TANTALUM	10uF	20%	6.3V
C593	1-162-970-11	CERAMIC CHIP	0.01uF	10%	25V
C594	1-135-259-11	TANTAL. CHIP	10uF	20%	6.3V
C595	1-162-915-11	CERAMIC CHIP	10PF	0.5PF	50V
C596	1-113-619-11	CERAMIC CHIP	0.47uF		10V
C597	1-162-964-11	CERAMIC CHIP	0.001uF	10%	50V
C598	1-115-169-11	TANTALUM	10uF	20%	6.3V
C599	1-164-156-11	CERAMIC CHIP	0.1uF		25V
C600	1-164-156-11	CERAMIC CHIP	0.1uF		25V

Ref. No.	Part No.	Description			Remarks
C601	1-162-912-11	CERAMIC CHIP	7PF	0.5PF	50V
C602	1-162-912-11	CERAMIC CHIP	7PF	0.5PF	50V
C603	1-162-912-11	CERAMIC CHIP	7PF	0.5PF	50V
C604	1-162-912-11	CERAMIC CHIP	7PF	0.5PF	50V
C606	1-135-259-11	TANTAL. CHIP	10uF	20%	6.3V
C607	1-113-619-11	CERAMIC CHIP	0.47uF		10V
C608	1-113-619-11	CERAMIC CHIP	0.47uF		10V
C609	1-135-259-11	TANTAL. CHIP	10uF	20%	6.3V
C610	1-135-259-11	TANTAL. CHIP	10uF	20%	6.3V
C611	1-135-259-11	TANTAL. CHIP	10uF	20%	6.3V
C612	1-162-927-11	CERAMIC CHIP	100PF	5%	50V
C613	1-162-927-11	CERAMIC CHIP	100PF	5%	50V
C614	1-164-156-11	CERAMIC CHIP	0.1uF		25V
C615	1-164-156-11	CERAMIC CHIP	0.1uF		25V
C616	1-164-156-11	CERAMIC CHIP	0.1uF		25V
C617	1-164-156-11	CERAMIC CHIP	0.1uF		25V
C618	1-115-467-11	CERAMIC CHIP	0.22uF	10%	10V
C619	1-165-128-11	CERAMIC CHIP	0.22uF		16V
C622	1-104-851-11	TANTAL. CHIP	10uF	20%	10V
C623	1-135-259-11	TANTAL. CHIP	10uF	20%	6.3V
C624	1-113-619-11	CERAMIC CHIP	0.47uF		10V
C625	1-164-156-11	CERAMIC CHIP	0.1uF		25V
C626	1-164-156-11	CERAMIC CHIP	0.1uF		25V
C627	1-164-156-11	CERAMIC CHIP	0.1uF		25V
C628	1-164-156-11	CERAMIC CHIP	0.1uF		25V
C629	1-107-685-11	TANTAL. CHIP	15uF	20%	6.3V
C630	1-162-910-11	CERAMIC CHIP	5PF	0.25PF	50V
C631	1-162-910-11	CERAMIC CHIP	5PF	0.25PF	50V
C633	1-164-346-11	CERAMIC CHIP	1uF		16V
C634	1-104-852-11	TANTAL. CHIP	22uF	20%	10V
C635	1-104-851-11	TANTAL. CHIP	10uF	20%	10V
C636	1-164-346-11	CERAMIC CHIP	1uF		16V
C637	1-162-970-11	CERAMIC CHIP	0.01uF	10%	25V
C638	1-164-156-11	CERAMIC CHIP	0.1uF		25V
⚠C701	1-163-013-11	CERAMIC CHIP	2200PF	10%	50V
		< CONNECTOR >			
CN303	1-568-347-11	CONNECTOR, BOARD TO BOARD 5P			
CN501	1-573-352-11	CONNECTOR, FFC/FPC 12P			
CN502	1-573-929-11	CONNECTOR, FFC/FPC (ZIF) 20P			
CN503	1-573-358-11	CONNECTOR, FFC/FPC 18P			
* CN504	1-573-919-11	CONNECTOR, FFC/FPC (ZIF) 10P			
CN505	1-573-931-11	CONNECTOR, FFC/FPC (ZIF) 22P			
CN506	1-573-358-11	CONNECTOR, FFC/FPC 18P			
CN507	1-750-377-11	SOCKET, CONNECTOR 7P			
		< CONPOSITION CIRCUIT BLOCK >			
CP501	1-475-172-11	CONVERTER UNIT, DC-DC			
		< DIODE >			
D102	8-719-421-33	DIODE MA147			
D202	8-719-421-33	DIODE MA147			
D301	8-719-421-27	DIODE MA728			
D302	8-719-421-27	DIODE MA728			
D303	8-719-036-80	DIODE RD3.9SB-T1			
D304	8-719-036-80	DIODE RD3.9SB-T1			
D305	8-719-036-80	DIODE RD3.9SB-T1			
D501	8-719-980-38	DIODE SB07-03C			
D504	8-719-980-38	DIODE SB07-03C			
D505	8-719-048-98	DIODE RB160L-40TE25			

Ref. No.	Part No.	Description	Remarks
D506	8-719-026-26	DIODE MA786WK	
D508	8-719-036-80	DIODE RD3.9SB-T1	
D509	8-719-820-41	DIODE 1SS302	
D510	8-719-820-41	DIODE 1SS302	
D511	8-719-820-41	DIODE 1SS302	
D512	8-719-820-41	DIODE 1SS302	
D514	8-719-027-48	DIODE MA142WA	
D516	8-719-056-65	DIODE 1SS372-TE85L	
D517	8-719-421-27	DIODE MA728	
D518	8-719-421-27	DIODE MA728	
D519	8-719-421-27	DIODE MA728	
D521	8-719-026-26	DIODE MA786WK	
D522	8-719-056-65	DIODE 1SS372-TE85L	
		< IC >	
IC102	8-759-459-00	IC TLV2262IPW-E20	
IC202	8-759-459-00	IC TLV2262IPW-E20	
IC301	8-759-330-74	IC NJM2122M-TE2	
IC302	8-759-252-90	IC TLV2362IPW-ELM1500	
IC303	8-759-252-90	IC TLV2362IPW-ELM1500	
IC304	8-759-458-99	IC AK4520-VF-E2	
IC305	8-759-252-90	IC TLV2362IPW-ELM1500	
IC306	8-759-332-22	IC DS1802-TE2	
IC307	8-759-458-97	IC LA4800V-TLM	
IC308	8-759-252-90	IC TLV2362IPW-ELM1500	
IC309	8-759-332-22	IC DS1802-TE2	
IC310	8-759-458-98	IC TK15325M-TL	
IC312	8-759-462-30	IC TK11225BMCL	
IC501	8-759-159-76	IC MM1138XQ	
IC502	8-759-094-02	IC CXA8022N	
IC503	8-759-094-01	IC MB3796PF-EF	
IC504	8-759-095-39	IC LB1882V	
IC505	8-752-883-69	IC CXP87532-035R	
IC506	8-752-378-37	IC CXD2607BR	
IC507	8-752-366-06	IC CXK5V8257BTM-70LL	
IC508	8-759-357-58	IC AK6420HM-E2	
IC508	8-759-468-72	IC AK6420AM-E2	
IC511	8-759-295-09	IC TLC2932IPW	
IC512	8-759-710-79	IC NJM2107F	
IC513	8-759-243-19	IC TC7SU04F	
IC514	8-759-243-19	IC TC7SU04F	
IC515	8-759-449-28	IC LB8632V	
IC518	8-759-457-62	IC MB88347PFV	
IC519	8-759-464-08	IC XC62CP2502MR	
IC520	8-759-462-47	IC TK70001M-CB	
		< JACK >	
J301	1-750-369-21	JACK (MIC/LINE IN PLUG IN POWER)	
J302	1-750-369-11	JACK (LINE OUT)	
J303	1-779-496-11	JACK (Ω /REMOTE)	
J501	1-778-153-21	JACK,DC (POLARITY UNIFIED TYPE) (DC IN 4.5V)	
		< COIL >	
L301	1-412-002-31	INDUCTOR CHIP 4.7uH	
L305	1-410-997-31	INDUCTOR CHIP 2.2uH	
L501	1-412-006-31	INDUCTOR CHIP 10uH	
L502	1-410-997-31	INDUCTOR CHIP 2.2uH	
L503	1-410-997-31	INDUCTOR CHIP 2.2uH	

The components identified by mark ⚠ or dotted line with mark ⚠ are critical for safety. Replace only with part number specified.	Les composants identifiés par une marque ⚠ sont critiques pour la sécurité. Ne les remplacer que par une pièce portant le numéro spécifié.

MAIN

Ref. No.	Part No.	Description	Remarks
L504	1-416-227-11	COIL, CHOKE 100uH	
L505	1-416-228-11	COIL, CHOKE 82uH	
L506	1-412-002-31	INDUCTOR CHIP 4.7uH	
L507	1-412-002-31	INDUCTOR CHIP 4.7uH	
L508	1-412-002-31	INDUCTOR CHIP 4.7uH	
L509	1-412-002-31	INDUCTOR CHIP 4.7uH	
L510	1-414-402-11	INDUCTOR 47uH	
L511	1-410-997-31	INDUCTOR CHIP 2.2uH	
L512	1-412-002-31	INDUCTOR CHIP 4.7uH	
L513	1-412-002-31	INDUCTOR CHIP 4.7uH	
L514	1-412-006-31	INDUCTOR CHIP 10uH	
L515	1-412-002-31	INDUCTOR CHIP 4.7uH	
L516	1-412-002-31	INDUCTOR CHIP 4.7uH	
L517	1-411-312-11	FILTER, COMMON MODE	
		< TRANSISTOR >	
Q101	8-729-230-63	TRANSISTOR 2SC4116-YG	
Q201	8-729-230-63	TRANSISTOR 2SC4116-YG	
Q301	8-729-230-63	TRANSISTOR 2SC4116-YG	
Q302	8-729-427-83	TRANSISTOR XP6501	
Q303	8-729-425-46	TRANSISTOR XP4315-TXE	
Q304	8-729-427-83	TRANSISTOR XP6501	
Q305	8-729-427-83	TRANSISTOR XP6501	
Q306	8-729-230-63	TRANSISTOR 2SC4116-YG	
Q307	8-729-230-60	TRANSISTOR 2SA1586-YG	
Q308	8-729-427-83	TRANSISTOR XP6501	
Q309	8-729-427-80	TRANSISTOR XP6401	
Q310	8-729-427-83	TRANSISTOR XP6501	
Q311	8-729-428-50	TRANSISTOR XP6214-TXE	
Q312	8-729-425-18	TRANSISTOR XN4504	
Q313	8-729-425-46	TRANSISTOR XP4315-TXE	
Q315	8-729-230-60	TRANSISTOR 2SA1586-YG	
Q318	8-729-230-60	TRANSISTOR 2SA1586-YG	
Q319	8-729-230-60	TRANSISTOR 2SA1586-YG	
Q320	8-729-230-63	TRANSISTOR 2SC4116-YG	
Q321	8-729-230-60	TRANSISTOR 2SA1586-YG	
Q322	8-729-230-60	TRANSISTOR 2SA1586-YG	
Q323	8-729-427-83	TRANSISTOR XP6501	
Q324	8-729-230-60	TRANSISTOR 2SA1586-YG	
Q325	8-729-427-83	TRANSISTOR XP6501	
Q326	8-729-402-93	TRANSISTOR UN5214-TX	
Q327	8-729-427-80	TRANSISTOR XP6401	
Q328	8-729-230-60	TRANSISTOR 2SA1586-YG	
Q329	8-729-427-83	TRANSISTOR XP6501	
Q330	8-729-402-93	TRANSISTOR UN5214-TX	
Q331	8-729-425-46	TRANSISTOR XP4315-TXE	
Q332	8-729-425-46	TRANSISTOR XP4315-TXE	
Q503	8-729-807-87	TRANSISTOR 2SB1295-UL6	
Q504	8-729-820-86	TRANSISTOR 2SB1121-ST	
Q505	8-729-807-87	TRANSISTOR 2SB1295-UL6	
Q506	8-729-230-63	TRANSISTOR 2SC4116-YG	
Q508	8-729-928-81	TRANSISTOR DTC144EE	
Q509	8-729-230-60	TRANSISTOR 2SA1586-YG	
Q511	8-729-807-87	TRANSISTOR 2SB1295-UL6	
Q513	8-729-928-81	TRANSISTOR DTC144EE	
Q514	8-729-928-27	TRANSISTOR DTA144EE	
Q515	8-729-928-81	TRANSISTOR DTC144EE	
Q516	8-729-928-81	TRANSISTOR DTC144EE	
Q517	8-729-928-81	TRANSISTOR DTC144EE	
Q522	8-729-928-81	TRANSISTOR DTC144EE	
Q523	8-729-928-81	TRANSISTOR DTC144EE	
Q524	8-729-807-87	TRANSISTOR 2SB1295-UL6	
Q525	8-729-820-86	TRANSISTOR 2SB1121-ST	
Q526	8-729-230-63	TRANSISTOR 2SC4116-YG	
		< RESISTOR >	
R101	1-216-830-11	METAL CHIP 5.6K 5% 1/16W	
R102	1-216-837-11	METAL CHIP 22K 5% 1/16W	
R103	1-216-838-11	METAL CHIP 27K 5% 1/16W	
R104	1-218-895-11	METAL GLAZE 100K 0.50% 1/16W	
R105	1-218-839-11	METAL GLAZE 470 0.50% 1/16W	
R106	1-218-863-11	METAL GLAZE 4.7K 0.50% 1/16W	
R107	1-216-837-11	METAL CHIP 22K 5% 1/16W	
R108	1-218-887-11	METAL GLAZE 47K 0.50% 1/16W	
R109	1-216-817-11	METAL CHIP 470 5% 1/16W	
R110	1-218-883-11	METAL GLAZE 33K 0.50% 1/16W	
R111	1-216-833-11	METAL CHIP 10K 5% 1/16W	
R115	1-216-843-11	METAL CHIP 68K 5% 1/16W	
R116	1-216-841-11	METAL CHIP 47K 5% 1/16W	
R117	1-218-883-11	METAL GLAZE 33K 0.50% 1/16W	
R118	1-218-847-11	METAL GLAZE 1K 0.50% 1/16W	
R120	1-216-828-11	METAL CHIP 3.9K 5% 1/16W	
R121	1-216-833-11	METAL CHIP 10K 5% 1/16W	
R122	1-216-837-11	METAL CHIP 22K 5% 1/16W	
R123	1-216-837-11	METAL CHIP 22K 5% 1/16W	
R124	1-216-833-11	METAL CHIP 10K 5% 1/16W	
R125	1-216-825-11	METAL CHIP 2.2K 5% 1/16W	
R126	1-216-841-11	METAL CHIP 47K 5% 1/16W	
R127	1-216-809-11	METAL CHIP 100 5% 1/16W	
R129	1-218-871-11	METAL GLAZE 10K 0.50% 1/16W	
R130	1-218-871-11	METAL GLAZE 10K 0.50% 1/16W	
R131	1-216-831-11	METAL CHIP 6.8K 5% 1/16W	
R132	1-216-833-11	METAL CHIP 10K 5% 1/16W	
R133	1-216-833-11	METAL CHIP 10K 5% 1/16W	
R135	1-216-833-11	METAL CHIP 10K 5% 1/16W	
R136	1-216-837-11	METAL CHIP 22K 5% 1/16W	
R137	1-218-891-11	METAL GLAZE 68K 0.50% 1/16W	
R138	1-218-873-11	METAL GLAZE 12K 0.50% 1/16W	
R151	1-218-831-11	METAL GLAZE 220 0.50% 1/16W	
R152	1-216-837-11	METAL CHIP 22K 5% 1/16W	
R153	1-218-847-11	METAL GLAZE 1K 0.50% 1/16W	
R154	1-216-833-11	METAL CHIP 10K 5% 1/16W	
R155	1-216-308-00	METAL CHIP 4.7 5% 1/10W	
R156	1-218-871-11	METAL GLAZE 10K 0.50% 1/16W	
R157	1-218-878-11	METAL GLAZE 20K 0.50% 1/16W	
R158	1-218-885-11	METAL GLAZE 39K 0.50% 1/16W	
R159	1-216-833-11	METAL CHIP 10K 5% 1/16W	
R160	1-216-813-11	METAL CHIP 220 5% 1/16W	
R161	1-216-825-11	METAL CHIP 2.2K 5% 1/16W	
R162	1-216-821-11	METAL CHIP 1K 5% 1/16W	
R163	1-211-985-11	METAL GLAZE 47 0.50% 1/16W	
R201	1-216-830-11	METAL CHIP 5.6K 5% 1/16W	
R202	1-216-837-11	METAL CHIP 22K 5% 1/16W	
R203	1-216-838-11	METAL CHIP 27K 5% 1/16W	
R204	1-218-895-11	METAL GLAZE 100K 0.50% 1/16W	
R205	1-218-839-11	METAL GLAZE 470 0.50% 1/16W	
R206	1-218-863-11	METAL GLAZE 4.7K 0.50% 1/16W	
R207	1-216-837-11	METAL CHIP 22K 5% 1/16W	
R208	1-218-887-11	METAL GLAZE 47K 0.50% 1/16W	
R209	1-216-817-11	METAL CHIP 470 5% 1/16W	
R210	1-218-883-11	METAL GLAZE 33K 0.50% 1/16W	

Ref. No.	Part No.	Description			Remarks
R211	1-216-833-11	METAL CHIP	10K	5%	1/16W
R215	1-216-843-11	METAL CHIP	68K	5%	1/16W
R216	1-216-841-11	METAL CHIP	47K	5%	1/16W
R217	1-218-883-11	METAL GLAZE	33K	0.50%	1/16W
R218	1-218-847-11	METAL GLAZE	1K	0.50%	1/16W
R220	1-216-828-11	METAL CHIP	3.9K	5%	1/16W
R221	1-216-833-11	METAL CHIP	10K	5%	1/16W
R222	1-216-837-11	METAL CHIP	22K	5%	1/16W
R223	1-216-837-11	METAL CHIP	22K	5%	1/16W
R224	1-216-833-11	METAL CHIP	10K	5%	1/16W
R225	1-216-825-11	METAL CHIP	2.2K	5%	1/16W
R226	1-216-841-11	METAL CHIP	47K	5%	1/16W
R227	1-216-809-11	METAL CHIP	100	5%	1/16W
R229	1-218-871-11	METAL GLAZE	10K	0.50%	1/16W
R230	1-218-871-11	METAL GLAZE	10K	0.50%	1/16W
R231	1-216-831-11	METAL CHIP	6.8K	5%	1/16W
R232	1-216-833-11	METAL CHIP	10K	5%	1/16W
R233	1-216-833-11	METAL CHIP	10K	5%	1/16W
R235	1-216-833-11	METAL CHIP	10K	5%	1/16W
R236	1-216-837-11	METAL CHIP	22K	5%	1/16W
R237	1-218-891-11	METAL GLAZE	68K	0.50%	1/16W
R238	1-218-873-11	METAL GLAZE	12K	0.50%	1/16W
R251	1-218-831-11	METAL GLAZE	220	0.50%	1/16W
R252	1-216-837-11	METAL CHIP	22K	5%	1/16W
R253	1-218-847-11	METAL GLAZE	1K	0.50%	1/16W
R254	1-216-833-11	METAL CHIP	10K	5%	1/16W
R255	1-216-308-00	METAL CHIP	4.7	5%	1/10W
R256	1-218-871-11	METAL GLAZE	10K	0.50%	1/16W
R257	1-218-878-11	METAL GLAZE	20K	0.50%	1/16W
R258	1-218-885-11	METAL GLAZE	39K	0.50%	1/16W
R259	1-216-833-11	METAL CHIP	10K	5%	1/16W
R260	1-216-813-11	METAL CHIP	220	5%	1/16W
R261	1-216-825-11	METAL CHIP	2.2K	5%	1/16W
R262	1-216-821-11	METAL CHIP	1K	5%	1/16W
R263	1-211-985-11	METAL GLAZE	47	0.50%	1/16W
R301	1-216-845-11	METAL CHIP	100K	5%	1/16W
R302	1-216-815-11	METAL CHIP	330	5%	1/16W
R303	1-216-841-11	METAL CHIP	47K	5%	1/16W
R304	1-216-854-11	METAL CHIP	560K	5%	1/16W
R305	1-216-845-11	METAL CHIP	100K	5%	1/16W
R306	1-216-845-11	METAL CHIP	100K	5%	1/16W
R307	1-216-845-11	METAL CHIP	100K	5%	1/16W
R308	1-216-813-11	METAL CHIP	220	5%	1/16W
R309	1-216-817-11	METAL CHIP	470	5%	1/16W
R310	1-216-829-11	METAL CHIP	4.7K	5%	1/16W
R313	1-216-845-11	METAL CHIP	100K	5%	1/16W
R314	1-216-845-11	METAL CHIP	100K	5%	1/16W
R315	1-216-825-11	METAL CHIP	2.2K	5%	1/16W
R316	1-216-833-11	METAL CHIP	10K	5%	1/16W
R317	1-216-844-11	METAL CHIP	82K	5%	1/16W
R318	1-218-849-11	METAL GLAZE	1.2K	0.50%	1/16W
R319	1-216-825-11	METAL CHIP	2.2K	5%	1/16W
R320	1-216-833-11	METAL CHIP	10K	5%	1/16W
R321	1-216-825-11	METAL CHIP	2.2K	5%	1/16W
R322	1-216-849-11	METAL CHIP	220K	5%	1/16W
R325	1-216-821-11	METAL CHIP	1K	5%	1/16W
R326	1-216-833-11	METAL CHIP	10K	5%	1/16W
R327	1-216-845-11	METAL CHIP	100K	5%	1/16W
R328	1-216-841-11	METAL CHIP	47K	5%	1/16W
R329	1-216-841-11	METAL CHIP	47K	5%	1/16W

Ref. No.	Part No.	Description			Remarks
R330	1-216-833-11	METAL CHIP	10K	5%	1/16W
R331	1-216-809-11	METAL CHIP	100	5%	1/16W
R332	1-216-841-11	METAL CHIP	47K	5%	1/16W
R333	1-216-797-11	METAL CHIP	10	5%	1/16W
R334	1-216-833-11	METAL CHIP	10K	5%	1/16W
R335	1-216-833-11	METAL CHIP	10K	5%	1/16W
R336	1-216-833-11	METAL CHIP	10K	5%	1/16W
R337	1-216-845-11	METAL CHIP	100K	5%	1/16W
R338	1-216-833-11	METAL CHIP	10K	5%	1/16W
R339	1-216-833-11	METAL CHIP	10K	5%	1/16W
R340	1-216-849-11	METAL CHIP	220K	5%	1/16W
R341	1-216-833-11	METAL CHIP	10K	5%	1/16W
R342	1-216-833-11	METAL CHIP	10K	5%	1/16W
R343	1-216-833-11	METAL CHIP	10K	5%	1/16W
R344	1-216-833-11	METAL CHIP	10K	5%	1/16W
R345	1-216-845-11	METAL CHIP	100K	5%	1/16W
R346	1-216-809-11	METAL CHIP	100	5%	1/16W
R347	1-216-841-11	METAL CHIP	47K	5%	1/16W
R348	1-216-833-11	METAL CHIP	10K	5%	1/16W
R349	1-216-833-11	METAL CHIP	10K	5%	1/16W
R350	1-216-833-11	METAL CHIP	10K	5%	1/16W
R351	1-216-809-11	METAL CHIP	100	5%	1/16W
R352	1-216-825-11	METAL CHIP	2.2K	5%	1/16W
R353	1-216-833-11	METAL CHIP	10K	5%	1/16W
R354	1-216-849-11	METAL CHIP	220K	5%	1/16W
R355	1-216-825-11	METAL CHIP	2.2K	5%	1/16W
R356	1-216-825-11	METAL CHIP	2.2K	5%	1/16W
R357	1-216-825-11	METAL CHIP	2.2K	5%	1/16W
R358	1-216-825-11	METAL CHIP	2.2K	5%	1/16W
R359	1-216-833-11	METAL CHIP	10K	5%	1/16W
R360	1-216-849-11	METAL CHIP	220K	5%	1/16W
R361	1-216-825-11	METAL CHIP	2.2K	5%	1/16W
R362	1-216-864-11	METAL CHIP	0	5%	1/16W
R363	1-216-833-11	METAL CHIP	10K	5%	1/16W
R364	1-216-837-11	METAL CHIP	22K	5%	1/16W
R365	1-216-864-11	METAL CHIP	0	5%	1/16W
R366	1-216-864-11	METAL CHIP	0	5%	1/16W
R367	1-216-864-11	METAL CHIP	0	5%	1/16W
R368	1-216-864-11	METAL CHIP	0	5%	1/16W
R369	1-216-864-11	METAL CHIP	0	5%	1/16W
R370	1-216-864-11	METAL CHIP	0	5%	1/16W
R371	1-216-864-11	METAL CHIP	0	5%	1/16W
R372	1-216-864-11	METAL CHIP	0	5%	1/16W
R373	1-216-864-11	METAL CHIP	0	5%	1/16W
R374	1-216-308-00	METAL CHIP	4.7	5%	1/10W
R375	1-216-809-11	METAL CHIP	100	5%	1/16W
R376	1-216-809-11	METAL CHIP	100	5%	1/16W
R503	1-216-828-11	METAL CHIP	3.9K	5%	1/16W
R504	1-216-834-11	METAL CHIP	12K	5%	1/16W
R505	1-216-834-11	METAL CHIP	12K	5%	1/16W
R506	1-216-834-11	METAL CHIP	12K	5%	1/16W
R507	1-216-811-11	METAL CHIP	150	5%	1/16W
R508	1-217-806-11	METAL GLAZE	1	5%	1/8W
R509	1-217-806-11	METAL GLAZE	1	5%	1/8W
R510	1-216-843-11	METAL CHIP	68K	5%	1/16W
R511	1-216-843-11	METAL CHIP	68K	5%	1/16W
R512	1-216-840-11	METAL CHIP	39K	5%	1/16W
R513	1-216-813-11	METAL CHIP	220	5%	1/16W
R514	1-216-813-11	METAL CHIP	220	5%	1/16W
R515	1-216-825-11	METAL CHIP	2.2K	5%	1/16W

MAIN

Ref. No.	Part No.	Description			Remarks
R516	1-216-832-11	METAL CHIP	8.2K	5%	1/16W
R517	1-216-828-11	METAL CHIP	3.9K	5%	1/16W
R518	1-216-830-11	METAL CHIP	5.6K	5%	1/16W
R519	1-216-023-00	METAL CHIP	82	5%	1/10W
R520	1-216-843-11	METAL CHIP	68K	5%	1/16W
R522	1-216-825-11	METAL CHIP	2.2K	5%	1/16W
R523	1-216-833-11	METAL CHIP	10K	5%	1/16W
R525	1-216-821-11	METAL CHIP	1K	5%	1/16W
R526	1-208-613-21	METAL GLAZE	0.39	10%	1/8W
R527	1-208-613-21	METAL GLAZE	0.39	10%	1/8W
R528	1-216-845-11	METAL CHIP	100K	5%	1/16W
R529	1-216-845-11	METAL CHIP	100K	5%	1/16W
R530	1-216-845-11	METAL CHIP	100K	5%	1/16W
R531	1-218-887-11	METAL GLAZE	47K	0.50%	1/16W
R532	1-218-887-11	METAL GLAZE	47K	0.50%	1/16W
R533	1-216-801-11	METAL CHIP	22	5%	1/16W
R534	1-216-829-11	METAL CHIP	4.7K	5%	1/16W
R535	1-216-826-11	METAL CHIP	2.7K	5%	1/16W
R536	1-216-849-11	METAL CHIP	220K	5%	1/16W
R537	1-216-826-11	METAL CHIP	2.7K	5%	1/16W
R538	1-216-844-11	METAL CHIP	82K	5%	1/16W
R539	1-216-845-11	METAL CHIP	100K	5%	1/16W
R540	1-216-845-11	METAL CHIP	100K	5%	1/16W
R541	1-216-845-11	METAL CHIP	100K	5%	1/16W
R542	1-216-845-11	METAL CHIP	100K	5%	1/16W
R543	1-216-845-11	METAL CHIP	100K	5%	1/16W
R544	1-216-845-11	METAL CHIP	100K	5%	1/16W
R545	1-216-845-11	METAL CHIP	100K	5%	1/16W
R546	1-216-845-11	METAL CHIP	100K	5%	1/16W
R550	1-216-809-11	METAL CHIP	100	5%	1/16W
R551	1-216-809-11	METAL CHIP	100	5%	1/16W
R553	1-216-821-11	METAL CHIP	1K	5%	1/16W
R554	1-216-838-11	METAL CHIP	27K	5%	1/16W
R555	1-216-840-11	METAL CHIP	39K	5%	1/16W
R556	1-216-841-11	METAL CHIP	47K	5%	1/16W
R557	1-216-838-11	METAL CHIP	27K	5%	1/16W
R558	1-216-838-11	METAL CHIP	27K	5%	1/16W
R559	1-216-845-11	METAL CHIP	100K	5%	1/16W
R560	1-216-821-11	METAL CHIP	1K	5%	1/16W
R561	1-216-837-11	METAL CHIP	22K	5%	1/16W
R562	1-216-825-11	METAL CHIP	2.2K	5%	1/16W
R563	1-216-837-11	METAL CHIP	22K	5%	1/16W
R565	1-216-805-11	METAL CHIP	47	5%	1/16W
R566	1-216-827-11	METAL CHIP	3.3K	5%	1/16W
R568	1-216-847-11	METAL CHIP	150K	5%	1/16W
R569	1-216-841-11	METAL CHIP	47K	5%	1/16W
R570	1-216-833-11	METAL CHIP	10K	5%	1/16W
R571	1-216-833-11	METAL CHIP	10K	5%	1/16W
R572	1-216-833-11	METAL CHIP	10K	5%	1/16W
R573	1-216-829-11	METAL CHIP	4.7K	5%	1/16W
R574	1-216-819-11	METAL CHIP	680	5%	1/16W
R575	1-216-833-11	METAL CHIP	10K	5%	1/16W
R576	1-216-809-11	METAL CHIP	100	5%	1/16W
R577	1-216-809-11	METAL CHIP	100	5%	1/16W
R578	1-216-809-11	METAL CHIP	100	5%	1/16W
R579	1-216-809-11	METAL CHIP	100	5%	1/16W
R580	1-216-819-11	METAL CHIP	680	5%	1/16W
R581	1-216-829-11	METAL CHIP	4.7K	5%	1/16W
R582	1-216-809-11	METAL CHIP	100	5%	1/16W
R587	1-216-841-11	METAL CHIP	47K	5%	1/16W
R589	1-216-841-11	METAL CHIP	47K	5%	1/16W
R590	1-216-817-11	METAL CHIP	470	5%	1/16W
R591	1-216-817-11	METAL CHIP	470	5%	1/16W
R593	1-216-842-11	METAL CHIP	56K	5%	1/16W
R594	1-216-849-11	METAL CHIP	220K	5%	1/16W
R595	1-216-809-11	METAL CHIP	100	5%	1/16W
R596	1-216-845-11	METAL CHIP	100K	5%	1/16W
R597	1-216-845-11	METAL CHIP	100K	5%	1/16W
R598	1-216-845-11	METAL CHIP	100K	5%	1/16W
R599	1-216-845-11	METAL CHIP	100K	5%	1/16W
R600	1-216-801-11	METAL CHIP	22	5%	1/16W
R601	1-216-845-11	METAL CHIP	100K	5%	1/16W
R602	1-216-845-11	METAL CHIP	100K	5%	1/16W
R603	1-216-809-11	METAL CHIP	100	5%	1/16W
R606	1-216-817-11	METAL CHIP	470	5%	1/16W
R607	1-216-817-11	METAL CHIP	470	5%	1/16W
R610	1-216-833-11	METAL CHIP	10K	5%	1/16W
R611	1-216-815-11	METAL CHIP	330	5%	1/16W
R612	1-216-819-11	METAL CHIP	680	5%	1/16W
R613	1-216-829-11	METAL CHIP	4.7K	5%	1/16W
R614	1-216-829-11	METAL CHIP	4.7K	5%	1/16W
R615	1-216-829-11	METAL CHIP	4.7K	5%	1/16W
R616	1-216-819-11	METAL CHIP	680	5%	1/16W
R617	1-216-825-11	METAL CHIP	2.2K	5%	1/16W
R618	1-216-830-11	METAL CHIP	5.6K	5%	1/16W
R619	1-216-830-11	METAL CHIP	5.6K	5%	1/16W
R620	1-216-825-11	METAL CHIP	2.2K	5%	1/16W
R621	1-216-845-11	METAL CHIP	100K	5%	1/16W
R622	1-216-845-11	METAL CHIP	100K	5%	1/16W
R624	1-216-825-11	METAL CHIP	2.2K	5%	1/16W

< SWITCH >

S301	1-771-093-11	SWITCH, SLIDE (MIC/LINE IN)
S302	1-692-605-31	SWITCH, SLIDE (MANUAL/MIC LIMITER/AUTO(AGC))
S303	1-572-922-11	SWITCH, SLIDE (AVLS NORM/LIMIT)
S304	1-571-277-51	SWITCH, SLIDE (MIC ATT)
S305	1-571-754-31	SWITCH, PUSH (1 KEY) (Ω /REMOTE)
S501	1-692-605-31	SWITCH, SLIDE (SP/LP)
S502	1-572-688-11	SWITCH, PUSH (1 KEY) (CASLK)
S503	1-572-498-11	SWITCH, SLIDE (OPEN)

< VIBRATOR >

X501	1-767-498-11	OSCILLATOR, CRYSTAL 22.5792MHz
X502	1-767-499-11	OSCILLATOR, CRYSTAL 24.576MHz
X503	1-767-500-11	OSCILLATOR, CRYSTAL 11.2896MHz

****

1-665-812-11 REC VOL BOARD

****

This board is included in the MAIN BOARD

<CONNECTOR>

CN304	1-568-324-11	CONNECTOR, BOARD TO BOARD 5P

<VARIABLE RESISTOR>

RV301	1-225-463-11	RES, VAR, CARBON 50K/50K (REC REVEL)

****

Ref. No.	Part No.	Description	Remarks
		MISCELLANEOUS	
		**********	
5	1-475-171-11	PC BOARD UNIT, SYSTEM CONTROL	
58	1-665-830-11	PC BOARD, MOTOR FLEXIBLE	
59	8-719-031-97	DIODE NJL5134KL	
64	1-801-766-11	RF MODULE	
116	1-475-190-11	INVERTER UNIT	
118	8-839-042-11	DRUM ASSY DOU-28A/J-N	
131	1-698-959-11	MOTOR, DC	
155	1-475-193-11	PC BOARD UNIT, SENSOR	
175	1-698-958-11	MOTOR, CAPSTAN	

****

Ref. No.	Part No.	Description	Remarks
		ACCESSORIES & PACKING MATERIALS	
		**********	
	1-475-194-11	ADAPTOR, BATTERY CHARGE	
	1-475-196-11	REMOTE COMMANDER	
	1-528-787-11	BATTERY, NICKEL HYDROGEN	
	1-569-007-11	ADAPTOR, CONVERSION 2P (JEW)	
	3-800-626-01	INSTRUCTION (A7 SIZE) (JEW) (JAPAN)	
	3-858-733-01	MANUAL, INSTRUCTION (JEW) (JAPANESE)	
	3-858-733-11	MANUAL, INSTRUCTION (ENGLISH/FRENCH)	
	3-858-733-21	MANUAL, INSTRUCTION (AEP) (GERMAN/SPANISH)	
	3-858-733-31	MANUAL, INSTRUCTION (AEP) (ITALIAN/DUTCH)	
	3-858-733-41	MANUAL, INSTRUCTION (AEP) (SWEDISH/PORTUGUESE)	
	3-858-733-51	MANUAL, INSTRUCTION (JEW) (CHINESE/KOREAN)	
	4-991-525-01	CASE, CARRYING	
	4-992-300-01	CASE, ACC (US, CND, AEP, JEW)	
	4-992-301-01	SPACER, UK PLUG (AUS)	
	4-992-301-01	LABEL, MODEL NUMBER (J) (JEW)	
	8-953-208-90	HEADPHONE MDR-E747SP SET	

9-923-215-11

Sony Corporation
Personal A&V Products Company

97F1681-1
Printed in Japan © 1997.6
Published by Quality Engineering Dept.
(Shibaura)

TCD-D100

SONY®

SERVICE MANUAL

Ver 1.0 1998.07

US Model
Canadian Model
AEP Model
Australian Model
Tourist Model

CORRECTION-1

Correct your service manual as shown below.

• ☛ : Indicates corrected portion

Page	INCORRECT			CORRECT	
	Ref No.	Part No.	Description	Part No.	Description
			ACCESSORIES & PACKING MATERIALS **********		ACCESSORIES & PACKING MATERIALS **********
57		1-475-194-11	ADAPTOR,BATTERY CHARGE	X-4950-478-1 ☛	ADAPTOR,BATTERY CHARGE ASSY (US/Canadian/AEP/Australian)
				X-4950-479-1 ☛	ADAPTOR,BATTERY CHARGE ASSY (Tourist)
			———————	1-475-195-11	ADAPTOR,AC (AC-E45AM) (Tourist)

(ECN-DA800241)

9-923-215-91

Sony Corporation
Personal A&V Products Company

98G1679-1
Printed in Japan ©1998.7
Published by Quality Engineering Dept. (Shibaura)

TCD-D100

SONY

SERVICE MANUAL

Ver 1.0 1999. 04

US Model
Canadian Model
AEP Model
Australian Model
Tourist Model

CORRECTION-2

Correct your service manual as shown below.

• ☛ : **Indicates corrected portion**

Page	INCORRECT	CORRECT
47	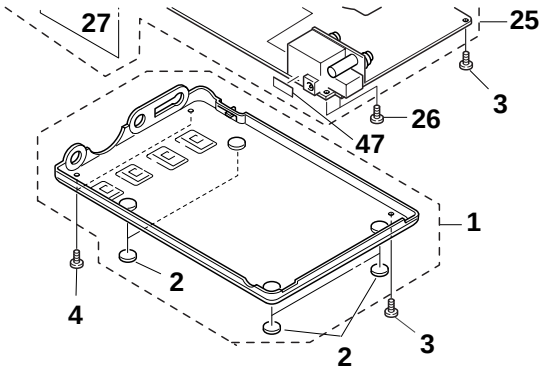	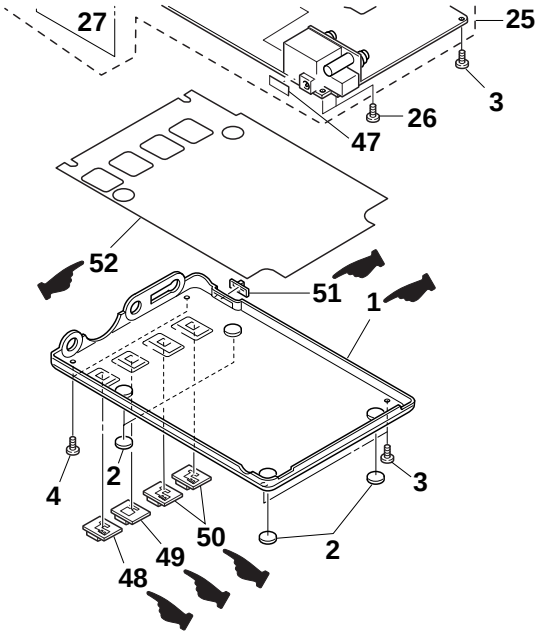

Ref No.	Part No.	Description
1	A-3311-601-A	PANEL ASSY, LOWER
48	———	———
49	———	———
50	———	———
51	———	———
52	———	———

Part No.	Description
4-990-737-01	PANEL, LOWER
4-990-738-01	KNOB (A)
4-990-739-01	KNOB (B)
4-990-740-01	KNOB (C)
4-990-741-01	KNOB (D)
4-992-473-01	SHEET (LOWER PANEL)

(RPC-99005)

9-923-215-92

Sony Corporation
Personal Audio Company

99D1678-1
Printed in Japan ©1999.4
Published by General Engineering Dept.