TCD-D8

SERVICE MANUAL

Ver 1.1 2001. 06

US Model
Canadian Model
AEP Model
UK Model
E Model
Tourist Model

DAT
Digital Audio Tape

WALKMAN

Model Name Using Similar Mechanism	TCD-D7/D7K
Tape Transport Mechanism Type	MT-D8-47

SPECIFICATIONS

Tape	Digital audio tape
Recording time	Standard 120 minutes Long-play mode: 240 minutes (with DT-120)
Sampling frequency	48 kHz, 44.1 kHz, 32 kHz
Frequency response	Standard: Fs 48 kHz 20-22,000 Hz (±1.0 dB) Fs 44.1 kHz 20-20,000 Hz (±1.0 dB) Fs 32 kHz 20-14,500 Hz (±1.0 dB) Long-play mode: Fs 32 kHz 20-14,500 Hz (±1.0 dB)
Signal to noise ratio	Standard: more than 87 dB Long-play mode: more than 87 dB (1 kHz IHF-A, 22 kHz LPF, LINE IN)
Dynamic range	Standard: more than 87 dB Long-play mode: more than 87 dB (1 kHz IHF-A, 22 kHz LPF, LINE IN)
Total harmonic distortion	Standard: less than 0.008% (1 kHz, 22 kHz LPF, LINE IN) Long-play mode: less than 0.09% (1 kHz, 22 kHz LPF, LINE IN)
Wow and flutter	Below measurable limit (less than ±0.001% W.PEAK)

Input

	Jack type	Impedance	Rated input level	Minimum input level
MIC	stereo minijack	4.7 kilohms	—	0.4 mV
LINE IN	stereo minijack	47 kilohms	500 mV	80 mV

Output

	Jack type	Impedance	Rated output	Maximum output level	Load impedance
PHONES/ LINE OUT	stereo minijack	27 ohms	LINE OUT 500 mV	PHONES 5 mW + 5 mW	LINE OUT more than 10 kilohms PHONES 32 ohms

Input/Output	DIGITAL I/O REMOTE jack (special jack) Digital input/output, remote control operation and timer-activated operation is possible by connection with an adaptor kit to this jack.
Power requirements	• DC 6V four size AA (LR6) batteries • DC IN 6 V jack accepts: the Sony AC power adaptor AC-E60AM or AC-E60HG (not supplied) for use on

	Operating voltage
US, Canadian model	120V AC, 60Hz
AEP model	220—230V AC, 50Hz
German model	120V AC, 60Hz or 220V AC, 50Hz
UK model	240V AC, 50Hz
E model	110—120V, 220—240V AC, 50/60Hz
Tourist model	100—240V AC, 50/60Hz

the car battery cord DCC-E160L (not supplied) for use with 12 V car battery or DCC-E260HG (not supplied) for use with 12V/24V car battery.

Battery life (when the illumination for display window is off)*	Playback	Recording (recording monitor)
Sony alkaline (size AA) LR6/AM3	3.5	3 (4**)
Sony rechargeable (size AA) NC-AA	2	1.5 (2**)

(Approx. hours)

* Measured at 20°C
**When the headphones or active speaker system is unplugged from the PHONES/LINE OUT jack

Power consumption	1.2 W
Dimension	Approx. 132.6 x 36.7 x 88.2 mm (51/4 x 11/2 x 31/2 in) (w/h/d) not incl. projecting parts and controls
Mass	Approx. 510 g (1 lb. 1 oz.) incl. batteries

Supplied accessories
AC power adaptor* AC-E60AM or AC-E60HG (1)
Alkaline (size AA) LR6 battery (4)
DAT cleaning cassette DT-10CLA (1)
Digital cable* POC-DA12
Carrying case (1)

* These accessories may be supplied to certain models.

Design and specifications are subject to change without notice.

DIGITAL AUDIO TAPE-CORDER

SONY®

9-960-401-12
2001F0400-1
© 2001. 6

Sony Corporation
Personal Audio Company
Shinagawa Tec Service Manual Production Group

TABLE OF CONTENTS

Section	Title	Page
1.	**GENERAL**	
	Location and Function of Controls	3
	Inserting the Batteries	4
	Setting the Clock	4
	Inserting the Cassette	5
	Recording	5
	Playing Back	6
	Connecting with Other Equipment for Recording	7
	Useful Recording Functions	7
	Writing Start ID	8
	Assigning Program Number	9
	Connecting with Other Equipment for Playback	9
	Useful Playback Functions	9
	Replacing the batteries	9
	Low-power Consumption Mode	10
	Operating with the AC Power Adaptor or Car Battery	10
	Connecting with Other Equipment	10
	Serial Copy Management System (SCMS)	10
	Message Display	11
2.	**DISASSEMBLY**	
2-1.	Lower Panel Assy	12
2-2.	Main Board	12
2-3.	Cassette Lid Assy	13
2-4.	System Control Unit	13
2-5.	Cabinet	14
2-6.	Bracket	14
2-7.	Cover (Tape Pass) Assy	15
2-8.	Drum Assy	15
3-1.	**ADJUSTMENTS**	16
3-2.	**MECHANICAL ADJUSTMENTS**	20
3-3.	**ELECTRICAL ADJUSTMENTS**	23
4.	**DIAGRAMS**	
4-1.	Block Diagram—MD Section—	24
4-2.	Block Diagram—Audio Section—	27
4-3.	Printed Wiring Boards	32
4-4.	Schematic Diagram—Main Section—	37
4-5.	Schematic Diagram—Analog Section—	42
4-6.	IC Pin Description	49
5.	**EXPLODED VIEWS**	
5-1.	Cabinet Section	51
5-2.	Cassette Holder Section	52
5-3.	Mechanism Deck Section-1	53
5-4.	Mechanism Deck Section-2	54
5-5.	Mechanism Deck Section-3	55
6.	**ELECTRICAL PARTS LIST**	56

SECTION 1
GENERAL

This section is extracted from instruction manual.

Location and Function of Controls

Refer to the pages in () for details.

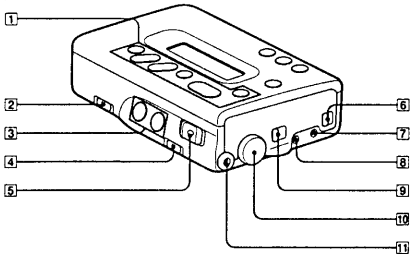

1 Tape operation buttons:
⏮/◀◀ (rewind/review • AMS) button (12, 13, 22)
STOP ■ button (10, 12)
PLAY ▶ button (12)
▶▶/⏭ (fast-forward/cue • AMS) button (12, 13, 22)
REC (record)/ID WRITE (Start ID write) button (9, 17, 19)
PAUSE ❚❚ button (9, 12)

2 SP/LP (standard play (48 kHz/44.1 kHz)/long play mode select) switch (9, 16, 17)

3 VOLUME +/– buttons (12)

4 PHONES (AVLS)/LINE OUT (headphones, automatic volume limiter system/line output) switch (18, 23, 24)

5 HOLD/PUSH OPEN switch (6, 26)
To open the cassette compartment lid.
→ Press and hold down the small button and slide the switch to OPEN.
To prevent accidental operation. (Hold function)
→ Slide the switch to HOLD without pressing the small button.
Hold function does not lock the CLOCK/SET, COUNTER/–, RESET/+ buttons (except for the low-power consumption mode). Slide the switch to HOLD in the stop mode to enter the low-power consumption mode.

6 MIC SENS (microphone sensitivity) switch (9)

7 MIC (microphone) jack (8)

8 LINE IN (line input) jack (15)

9 REC MODE (recording mode) switch (9)

10 REC LEVEL (recording level) control (17)

11 PHONES/LINE OUT (headphones/line output) jack (12, 17, 23)

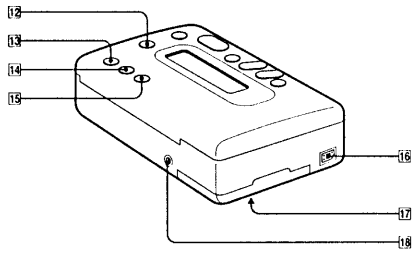

12 LIGHT button
Press to illuminate the display when using the tape-corder in the dark.

13 RESET/+ button (5, 40)

14 COUNTER/- button (5, 40)

15 CLOCK/SET button (5, 41)

16 REMOTE-DIGITAL I/O (input/output) jack (14, 23, 28)
Connect equipment with digital input/output using the connecting cable POC-DA12/DA12M/DA12S or RK-D3K (not supplied), the adaptor kit RM-D3K, the remote control RMT-D7, or the super bit mapping adaptor SBM-1 etc.

17 Battery compartment lid (4)

18 DC IN 6V (external power input) jack (27)

Display window

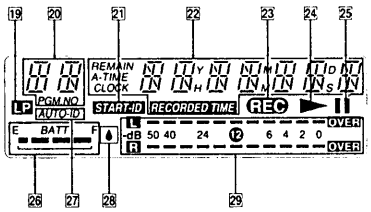

19 LP (Long Play) mode indicator (17, 18)

20 PGM.NO (program number)· day ·AM/PM indicator (5, 13)

21 START-ID indicator (19)

22 Tape counter/clock/message indicator (30, 40, 41)

23 REC (recording) indicator

24 ▶ (playback) indicator

25 ❚❚ (pause) indicator

26 BATT (remaining battery power status) indicator (25)

27 AUTO-ID (automatic Start ID signal) indicator (19)

28 Moisture condensation indicator (31, 33)

29 Peak level indicator (17)

Using the display

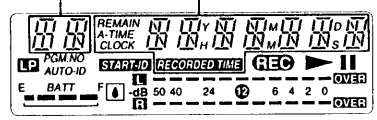

Tape counter display
Each time the COUNTER button is pressed, the display changes as follows:

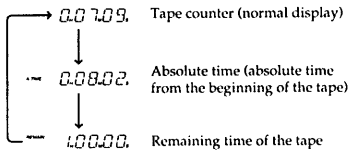

To reset the tape counter (normal display) to "0H00M00S"
Press the RESET button.

Remaining time of the tape
The remaining time of the tape appears normally after about 16 seconds of commencing playback in the SP mode. However, there may be a deviation in the amount of time displayed depending on the tape.

Note
The tape counter is provided as a visual guideline and is not a clock. The value displayed in the counter is not an accurate depiction of the actual time. Therefore, do not use the tape counter as a clock.

Note
When the tape-corder enters the recording, recording monitor, or pause mode while RECORDED TIME is indicated, the tape-corder displays the current time.

Message display
Refer to page 30 for "Message Display".

Clock display
Each time the CLOCK button is pressed, the display changes as follows:

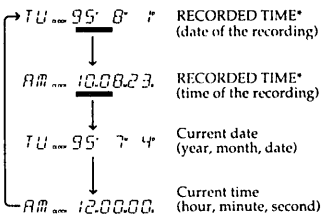

RECORDED TIME* (date of the recording)
RECORDED TIME* (time of the recording)
Current date (year, month, date)
Current time (hour, minute, second)

* The RECORDED TIME is displayed while playing back only.

Inserting the Batteries

Use four size AA (LR6) alkaline batteries.

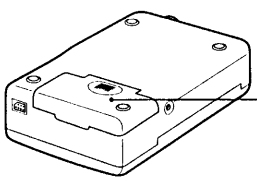

1

Open the battery compartment lid.

2

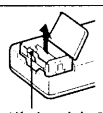

Lift the tab (△ PULL).

Remove the battery holder.

3

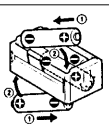

Insert from the ⊖ side of the battery.

Insert 4 new alkaline batteries into the battery holder.
Make sure that the batteries are facing the correct directions.

4

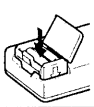

Insert the battery holder with the alkaline batteries and close the compartment lid.

The LCD display appears when the batteries are inserted.

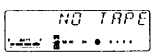

Setting the Clock

Set the clock before starting any recording operations to stamp the date and time. Otherwise, you cannot get the correct date and time.
The clock will return to its default setting (SU/95Y1M1D/AM12H00M00S) if the batteries are removed from the unit for one hour or more. In this case, set the clock again.

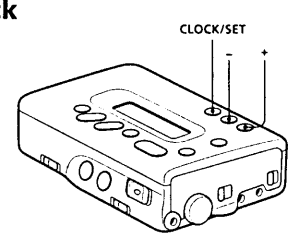

Make sure that the tape-corder is in the stop mode when the cassette is inserted, and that the Hold function is disabled.

1

Press the CLOCK/SET button for more than four seconds.

2

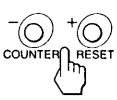

Press + or – button to set the current year, then press the CLOCK/SET button.

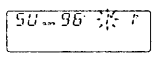

3

Repeat step 2 to set the current month, date, day, hour, minute, and second.

The display stops flashing and the clock operates.

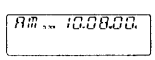

Tip
To set the clock accurately, set the second to 00 with the + or – button, and then press the CLOCK/SET button at the time of the tone.

To select either the 12-hour or 24-hour clock display
Press the + button for 2 seconds or more.

To quit the clock setting
Press the STOP ■ button. The clock display will return to the previous clock setting. However, if the day is set , the year, month, date and day will be set and will not be applicable for further cancellation.

Inserting the Cassette

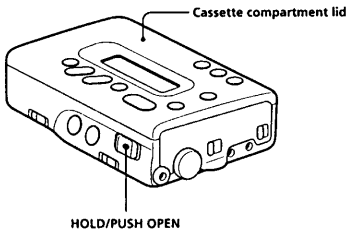

1

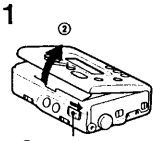

Open the cassette compartment lid.
① Press the HOLD/PUSH OPEN switch and slide to OPEN. Release the switch when the cassette compartment lid opens slightly.
② Open the cassette compartment lid.

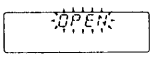

2

Insert the cassette.

Insert the cassette with the window facing up. When the cassette is inserted upside down, removal of the cassette may not be possible.

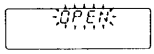

3

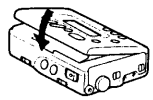

Close the lid.

The cassette is loaded automatically.

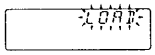

Notes

- Make sure that the cassette compartment lid is closed and "UNLOAD" or "LOAD" is not displayed before disconnecting the AC power adaptor or removing the batteries. Otherwise, the cassette compartment lid may not close. In this case, connect the power adaptor or insert the batteries again.
- Press and hold the button in the center of the HOLD/PUSH OPEN switch when sliding it to OPEN.

Tip

While the tape-corder is in the stop mode, slide the HOLD/PUSH OPEN switch to HOLD to enter the low-power consumption mode manually. (See page 26.)

To eject the cassette

While the tape-corder is in the stop mode, press the HOLD/PUSH OPEN switch and slide to OPEN.

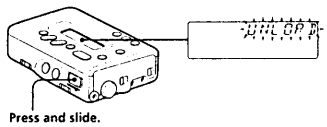

To protect your recording

Slide open the record-protect shutter to record-protect your tape.

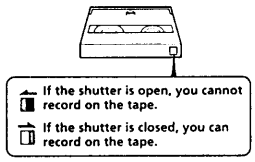

Notes on DAT cassettes

- Unlike conventional analog cassettes, playback and recording are applicable on one side of the cassette only.
- Under normal usage, the construction of the DAT cassette prevents undesirable entry of dust and foreign particles. Do not open the DAT cassette unnecessarily.
- Do not insert items into the holes on the reverse side of the DAT cassette.

To prevent accidental operations

Slide the HOLD/PUSH OPEN switch to HOLD.

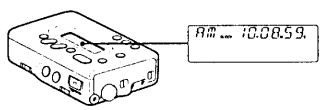

Recording

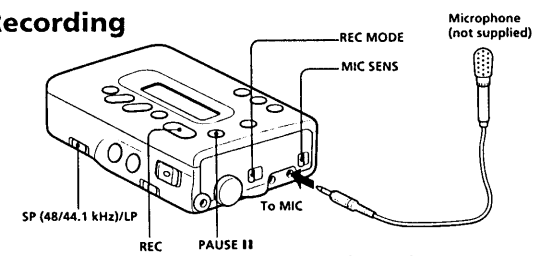

Refer to page 15 for "Connecting with Other Equipment for Recording".

Note

The absolute time may not be written correctly in the following cases.

- When recording on a partially recorded tape containing an unrecorded segment (i.e., a portion of the tape that has never been recorded).
- When recording on a partially recorded tape for which the absolute time has not been written originally.

Note

Do not press the STOP ■ button when "bLANK" is displayed. If pressing it, the absolute time will become "— —H— —M— —S" and will not be written thereafter.

Locating the point at which to begin recording

The absolute time is automatically written simultaneously while recording.

The absolute time is indicated as the length of time from the beginning of the tape, and is useful in determining the elapsed time from the beginning of the tape. If you wish to continue to record on a partially recorded tape, make sure that you initially locate the end of the previous recording prior to resuming recording from that point to avoid leaving any unrecorded segment unnecessarily. Once the absolute time is written, it cannot be erased.

If you wish to insert a four-second blank segment automatically, refer to page 18 for "Recording blank segment—REC MUTE".

To record from the beginning of the tape

Press the ⏮/◀◀ button to rewind the tape. "TOP" flashes when the tape is rewound to the beginning.

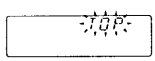

To record on a partially recorded tape

Press the ▶▶/⏭ button to locate the end of the previous recording. "bLANK" appears when the end of the previous recording is located, and the tape stops at the point.

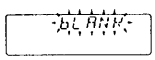

When "— —" flashes for the program number

"— —" indicates an unrecorded segment. Press the ⏮/◀◀ button to rewind the tape until "— —" stops flashing. Then, press the ▶▶/⏭ button to locate the end of the previous recording.

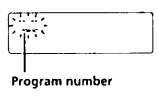

Recording from a microphone

1

Insert a cassette and locate the point at which to begin recording.

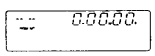

2

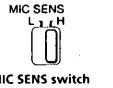

Set the MIC SENS switch.

H: Normal
L: For loud sound

3

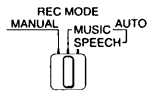

Set the REC MODE switch

Select AUTO (MUSIC or SPEECH).
The tape-corder adjusts the recording level automatically.
MUSIC: For music
SPEECH: For a meeting or conference
Select MANUAL when you want to adjust the recording level manually. (See page 17.)

4

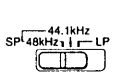

Select the sampling frequency.

Select SP (Standard Play mode 48 kHz or 44.1 kHz).

When recording in the Long Play mode, select LP. (See page 17.)

continued

5

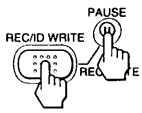

Press the REC and PAUSE ❚❚ buttons.

The tape-corder enters the pause mode. When the REC button only is pressed, the tape-corder enters the recording monitor mode (see page 18) and does not begin recording.

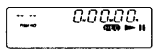

6

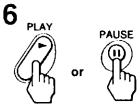

Press either the PLAY ► or PAUSE ❚❚ button.

The recording begins.

Tips
- To begin recording immediately, press the PLAY ► button while pressing the REC button in the stop or playback mode.
- The input source is displayed when the source is changed during recording, monitoring, or in the recording pause mode.
- The sampling frequency is displayed when the sampling frequency is changed during recording.

Notes
- Changing the sampling frequency while recording may cause temporary sound dropout to be recorded.
- Connecting or disconnecting the plug from the PHONES/LINE OUT jack while recording may cause noise to be recorded.
- Noise may be recorded when the display light is turned on while recording. In this case, turn it off.

Other operations

To	Press
Stop recording	STOP ■
Pause recording	PAUSE ❚❚
Release pause	PAUSE ❚❚ or PLAY ►
Check the input source in the stop mode in the recording pause mode	REC twice REC Press the button until the following display appears.
Check the sampling frequency	PLAY ► in the recording mode The following display appears while the button is pressed.

Tips
- If the tape-corder remains in the pause mode for five minutes or more, the tape-corder will enter the stop mode automatically in order to protect the head and tape.
- If the tape-corder remains in the stop mode for three minutes or more, the tape-corder will enter the low-power consumption mode automatically (see page 26) to protect the tape and to conserve the battery (except in the monitoring mode).
- When the tape-corder records to the end of the tape, it rewinds the tape automatically to the beginning and stops. (Auto-rewind function).

To record relatively low sound

Lower the recording level (in the MANUAL recording mode) and move the microphone as close as possible to the source. Clear and optimum recording with minimal noise interferences will be achieved.

Choosing microphones for better recording

The recording are affected by and are dependent upon the type of microphones used. For better recording, use the optional ECM-959A or ECM-737 microphone.

Compatible microphones
- Optional plug-in power type microphones are available for this tape-corder.
- Optional auto power supply type microphones are not available for this tape-corder.

Playing Back

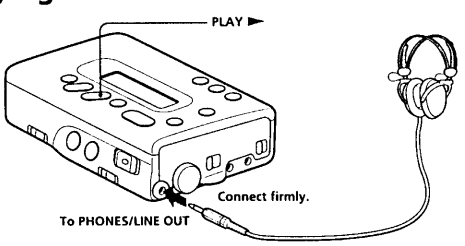

Refer to page 23 for "Connecting with Other Equipment for Playback".

1

Insert a cassette and set the PHONES (AVLS)/LINE OUT switch to ♫ AVLS OFF.

Set to ♫ AVLS ON when using the AVLS* function.

2

Press the PLAY ► button.

The playback begins.

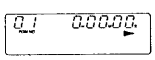

Tips
- The SP (Standard Play) mode and LP (Long Play) mode will be detected automatically for playback. Therefore, it is not necessary to adjust the SP/LP switch.
- When the tape-corder plays back to the end of the tape or End ID, it rewinds the tape automatically to the beginning and stops (Auto-rewind function).

* Automatic Volume Limiter System

Other operations

To	Press
Adjust the volume	VOLUME +/–
Stop playback	STOP ■
Pause playback	PAUSE ❚❚
Release pause	PAUSE ❚❚ or PLAY ►
Fast forward	►►/►►I in the stop mode
Rewind	I◄◄/◄◄ in the stop mode

Tips
- If the tape-corder remains in the pause mode for five minutes or more, the tape-corder will enter the stop mode automatically in order to protect the head and tape.
- If the tape-corder remains in the stop mode for three minutes or more, the tape-corder will enter the low-power consumption mode automatically (see page 26) to protect the tape and to conserve the battery (except in the monitoring mode).

Notes
- The AMS function will not operate if the Start IDs are not written. (See page 19.)
- The AMS function may not operate properly with a DAT cassette recorded on another DAT deck.

* Automatic Music Sensor

To fast-forward/rewind while monitoring the sound

You can fast-forward (cue) or rewind (review) while monitoring the sound.

Cue	Press and hold ►►/►►I in the playback mode. When the button is released, normal playback resumes.
Review	Press and hold I◄◄/◄◄ in the playback mode. When the button is released, normal playback resumes.

To high speed cue/review

High speed cue	Press PLAY ► and ►►/►►I during playback.
High speed review	Press PLAY ► and I◄◄/◄◄ during playback.

To locate the beginning of a program (track)—AMS* function

You can locate the beginning of a program (track) in the playback, fast-forward/rewind, and stop modes.
Playback mode: Press ►►/►►I or I◄◄/◄◄ quickly.
Fast-forward/rewind mode: Press ►►/►►I or I◄◄/◄◄ once.
Stop mode: Press ►►/►►I or I◄◄/◄◄ twice.

To locate the beginning of the next/succeeding program (track)	Press ►►/►►I once/repeatedly
E.g.: When locating the beginning of the fifth succeeding program (track)	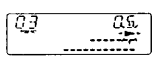
To locate the beginning of the current/previous program (track)	Press I◄◄/◄◄ once/repeatedly
E.g.: When locating the beginning of the fourth previous program (track) including the current program (track)	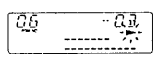

To check the sampling frequency

You can check the sampling frequency of the recorded sound.

Pres PLAY ► in the playback mode

The following display appears while the button is pressed.

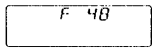

Display during fast-forward/rewind (AMS function)

Peak level indicator (L) shows the tape transport direction. Peak level indicator (R) shows the remaining amount of tape.

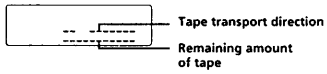

To play back the tape from the beginning automatically—Auto-play function

Press the PLAY ► button while pressing the ⏮/◀◀ button. Playback begins automatically when the tape is rewound to the beginning.

Likewise, playback begins automatically when the tape is rewound to the beginning of the previous program (track) in the AMS function.

Connecting with Other Equipment for Recording

You can connect the tape-corder to other analog audio equipment and audio equipment with digital output. Refer to page 8 for "Recording".

Note

When recording from analog audio equipment, disconnect the microphone from the tape-corder.

Otherwise, the sound from the microphone is recorded.

Notes

- If "COPY PROHIBIT" is displayed, the source cannot be recorded. (See page 30.)
- Make sure to set the switch of the connecting cable to DIGITAL before recording. The input remains as analog input even if the switch is set to DIGITAL while recording.

Tips

When connecting with an audio equipment with digital output, note the followings:

- Setting of the recording mode is not required.
- The recording level is set automatically to the level of the source. It is impossible to adjust it with this tape-corder manually.

Recording from analog audio equipment (Analog connection)

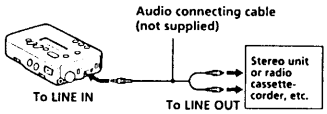

1. Select the recording mode and sampling frequency.
2. Press the REC and PAUSE ❚❚ buttons.
3. Press either the PLAY ► or PAUSE ❚❚ button to begin recording. Then, begin playback of the connected source.

Recording from audio equipment with digital output (Digital connection)

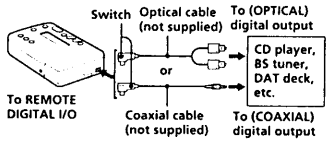

1. Use and connect the optical cable or coaxial cable according to the digital output jack of the connected equipment.
2. Set the switch of the connecting cable to DIGITAL.
3. Press the REC and PAUSE ❚❚ buttons.
4. Press either the PLAY ► or PAUSE ❚❚ button to begin recording. Then, begin playback of the connected source.

Tip

In digital connection, setting of the SP/LP switch is applicable when recording a 32 kHz source only. (When set to SP, the source is recorded in the 32 kHz SP mode. When set to LP, the source is recorded in the 32 kHz LP mode.)

The sampling frequency for recording is automatically set depending upon the source.

Source and sampling frequency for recording

Observe the following suggested guidelines for the source and sampling frequency when recording.

Source	Sampling frequency
Broadcasting satellite B mode audio DAT SP mode	48 kHz
CD MD	44.1 kHz
Broadcasting satellite A mode audio DAT LP mode	32 kHz

Useful Recording Functions

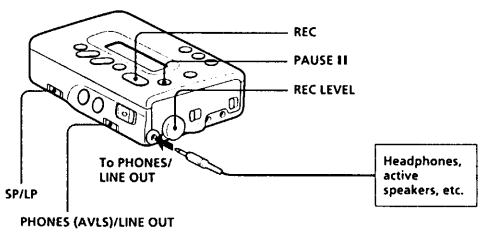

Notes

- It is impossible to adjust the recording level manually in the digital connection.
- Recording level is set excessively high when OVER appears in the right side of the peak level indicator.

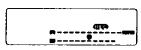

Turn down the recording level to avoid distortion.

Notes

- A tape recorded in the LP mode cannot be played back on a DAT deck which is not equipped with the LP mode function.
- A loud noise may be heard during the transition from the SP mode to the LP mode when a tape containing a recording that has been switched from the SP mode to the LP mode halfway, is played back on a DAT deck which is not equipped with the LP mode function. In this case, turn down the volume or stop playback.

Adjusting the recording level manually—Manual recording

For optimum recording with microphones or from analog audio equipment, adjust the recording level manually.

1. Set the REC MODE switch to MANUAL.
2. Press the REC button to enter the recording monitor mode.
3. Begin playback of the source and turn the REC LEVEL control to adjust the recording level while monitoring the sound.

   Turn the REC LEVEL control so that the peak level indicators are maintained around level ⓬ of the peak level meter.

   Make sure that OVER does not appear when a loud sound is input.

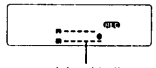

4. Press the PLAY ► button while pressing the REC button to begin recording.

Recording in the Long Play mode—LP REC

Set the SP/LP switch to LP to record twice the recording time of conventional DAT cassettes. Accordingly, a 60-minute DAT cassette recorded in the LP mode enables recording of 120 minutes.

Tape counter display during LP mode

The absolute time and the remaining time of the tape are based on the SP mode. Therefore, the actual time is twice the amount of the value shown on the display.

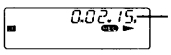

The actual time during LP mode is 4 and half minutes.

Recording blank segment—REC MUTE

A blank (unrecorded) segment can be inserted at the beginning of the program (track) and between programs (tracks). In this case, the Start ID is not written.

1 Press the REC button and the PAUSE ❚❚ button to enter the recording pause mode.

2 Press the PAUSE ❚❚ button while pressing the REC button.

A four-second blank segment is inserted and the unit returns to the recording pause mode automatically.

Monitoring the recording

Use the headphones or speakers of the stereo unit to monitor the sound while recording.

1 Plug the headphones or stereo unit to the PHONES/LINE OUT jack of the tape-corder.

2 Set the PHONES (AVLS)/LINE OUT switch as shown below.

Connected audio equipment	Position of switch
Headphones	∩ AVLS OFF or ON
Stereo unit (via LINE IN)	LINE OUT

3 Begin recording.

Noise may be heard in the monitor sound when recording in digital connection. This is not a malfunction and the noise is not recorded.

Tip

To insert a blank segment of 4 seconds or more, press the PAUSE ❚❚ button while pressing the REC button, and then hold down the PAUSE ❚❚ button only for 4 seconds or more. The tape-corder enters the pause mode when the PAUSE ❚❚ button is released.

Notes

- When a plug is connected to the PHONES/LINE OUT jack, the tape-corder cannot change the output mode from LINE OUT to PHONES (AVLS) during recording although you can set the PHONES (AVLS)/LINE OUT switch to PHONES (AVLS), vice versa. Stop recording or disconnect the plug from the jack and set the PHONES (AVLS)/LINE OUT switch.
- The volume will be very loud when using the headphones to monitor the sound while recording if the PHONES (AVLS)/LINE OUT switch has set to LINE OUT.

Writing Start ID

The Start ID is a signal which indicates the beginning of a program (track). The tape-corder searches the Start IDs to locate the beginning of a program (track) with the AMS (Automatic Music Sensor) function.

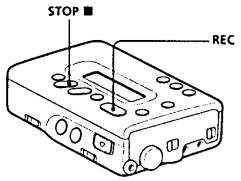

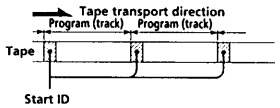

Tip

To write the Start ID during recording, press the REC button. The Start ID is written at the point where the REC button is pressed regardless of whether "AUTO-ID" is displayed or not.

Notes

- The buttons except the STOP ■ button do not work while "START-ID" is flashing.
- When AUTO-ID is turned on, the Start ID may not be written properly if there is noise.
- When writing start IDs continuously, make sure that there is an interval of 9 seconds or more (18 seconds or more in the LP mode) between the start IDs. Otherwise, the tape-corder may not locate the beginning of a program (track) correctly.

Writing Start ID during recording

When AUTO-ID is turned on, the Start IDs will be written during recording on the basis of the output level of the source. When AUTO-ID is turned off, the Start-IDs will be written during recording on the basis of the existing ID information of the source.

1 Press the REC button while pressing the STOP ■ button so that "AUTO-ID" appears (to turn on AUTO-ID) or disappears (to turn off AUTO-ID).

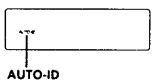

2 Begin recording. When the Start ID is written, "WRITE" appears for about two seconds, and then START-ID flashes for about 9 seconds (about 18 seconds in the LP mode).

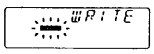

Writing Start ID when AUTO-ID is turned on

Source	A Start ID is written when
All	• Recording begins or the recording pause is released. (During a soundless segment, Start ID is written at the point where sound is emitted.) • A soundless segment or a segment with a very low recording level of 3 seconds or more. • While sound is input the sampling frequency is changed. • The REC button is pressed during recording.

Writing Start ID when AUTO-ID is turned off

Source	A Start ID is written when
All	• Recording begins or the recording pause is released. (Start ID is written regardless of whether the segment contains a sound or not.) • The REC button is pressed during recording.
CD player (digital input)	Identical to the existing program (track) information of the CD. (In addition to the above.)
DAT player (digital input)	Identical to the existing program (track) information of the DAT tape. (In addition to the above.)

Notes

- When AUTO-ID is turned off, the existing program (track) information of the CD may not be written properly as the Start ID depending on the CD player in use.
- The existing program (track) information of the MD is not written as the Start ID.

Notes

- Start IDs which are written during recording or which are written after selection, cannot be moved. Rewrite it after erasing.
- Start IDs cannot be written while START-ID flashes rapidly during the Rehearsal function.

Writing Start ID during playback

With the optional system adaptor kit RM-D3K or the wired remote control RMT-D7, you can write the Start ID without erasing the contents of the existing recording. (For more details, refer to the Operating Instructions manual that comes with each product.)

"REHRSAL." flashes when you select the point for Start ID, the tape-corder plays back the segment of the tape up to 3 seconds from the point and repeat it 16 times (Rehearsal function).

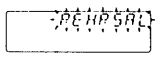

To adjust the selected point

Each time you press the ◀◀ or ▶▶ button of RM-D3K or RMT-D7, the selected point shifts backwards or forwards in 0.3-second increments, up to a maximum extent of about 10 seconds in either direction.

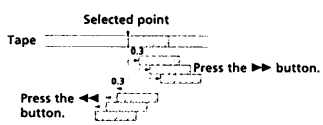

Note

If a Start ID is erased, the program number which is written on the same point will be erased also.

Erasing Start ID

With the optional system adaptor kit RM-D3K or the wired remote control RMT-D7, you can erase the Start IDs without erasing the contents of the existing recording. (For more details, refer to the Operating Instructions manual that comes with each product.)

Erasing the Start ID is possible when the tape-corder is in the stop or playback mode only.

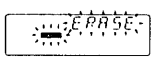

Assigning Program Number

The program number is a signal which indicates the number of the program (track).

The program number is written at the same time as the Start ID.

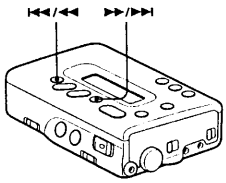

Note

Writing and renumbering of the program number may not be completed successfully to the tape that has been recorded on another DAT deck and has a Start ID at the beginning.

When recording from the beginning of the tape

The program number is written automatically from number 1 in sequential order at the same time as the Start ID.

When recording from the halfway of the tape

Press the ▶▶/⏭ or ⏮/◀◀ button to display the program number before you begin recording. The program number is written in sequential order from the following program at the same time the Start ID is written.

Renumbering the program number

With the optional system adaptor kit RM-D3K or the wired remote control RMT-D7, you can renumber the program number. (For more details, refer to the Operating Instructions manual that comes with each product.)

"RENUM" flashes while the program number is renumbered. When the renumbering operation is completed, the tape-corder rewinds the tape to the beginning and enters the stop mode.

Renumbering is necessary to the following tape:

- On which the Start ID is written during playback.
- Which has missing program numbers or duplicated program numbers because the tape is recorded from the halfway of it.
- Which has a missing program number because the program number is erased at the same time a Start ID is erased on the tape.

Connecting with Other Equipment for Playback

You can connect the tape-corder to other analog audio equipment and audio equipment with digital output. Refer to page 12 for "Playing Back".

Tip

The output level of the PHONES/LINE OUT jack and the REMOTE DIGITAL I/O jack is fixed. The volume cannot be adjusted with the VOLUME buttons of this tape-corder.

Note

When a plug is connected to the PHONES/LINE OUT jack, the tape-corder cannot change the output mode from LINE OUT to PHONES (AVLS) during playback although you can set the PHONES (AVLS)/LINE OUT switch to PHONES (AVLS), vice versa.

Playback with an analog audio equipment (Analog connection)

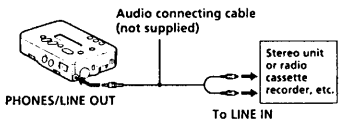

1. Set the PHONES (AVLS)/LINE OUT switch to LINE OUT.
2. Begin playback and adjust the volume of the connected equipment.

Playback with an audio equipment with digital input (Digital connection)

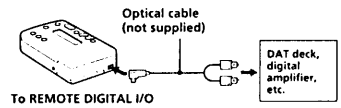

Connect the digital audio equipment to this tape-corder as shown. Begin playback and adjust the volume of the connected equipment.

Useful Playback Functions

The AVLS* function is operational when using the headphones during playback or in the recording monitor mode.
The AVLS function keeps down the maximum volume to prevent excessive sound from harming your ears.

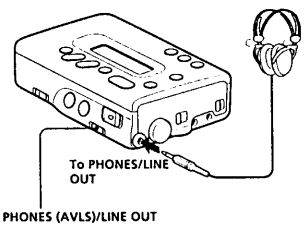

* Auto Volume Limiter System

Note

The sound may be warped and distorted at times especially during enhanced bass segments when the AVLS function is operating. In this case, turn down the volume.

Using AVLS function

Set the PHONES (AVLS)/LINE OUT switch to AVLS OFF or ON when hearing the headphones or recording monitor sound with the headphones. The AVLS function operates when set to ON.

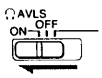

AVLS switch	Volume and display
ON	The volume is restricted at a designated level. "AVLS" appears followed by "VOL" when the VOLUME button is pressed. When the volume is at maximum level, "AVLS" flashes. AVLS
OFF	The volume is set to normal volume control. Each time you press the VOLUME buttons, the level of volume changes accordingly and "VOL" appears. VOL 04

Replacing the batteries

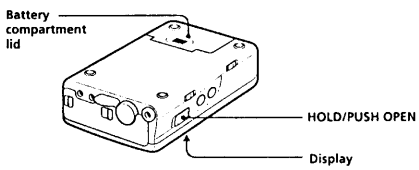

Tips

- This tape-corder is not equipped with a power switch. As a result, the LCD display will always be turned on as long as the batteries are inserted. However, power consumption is minimal and negligible.
- Especially when the tape-corder is in the low-power consumption mode, all indicators do not disappear in the display immediately after removing the battery holder from the tape-corder. Cancel the low-power consumption mode before removing the battery holder. If the batteries are replaced before all indicators disappear in the display, the remaing battery power may not be displayed correctly.
- The clock will return to its default setting (SU/95Y1M1D/AM12:00M00S) if the batteries are removed from the tape-corder for one hour or more. In this case, set the clock again.

Note

Remove the batteries when the tape-corder is not to be used for an extended period of time.

1. Remove the battery holder. (See page 4.)
2. Replace the batteries with new ones in the battery holder. (See page 4.)
3. Make sure that all indicators disappear in the display.
4. Insert the battery holder into the tape-corder and close the lid. (See page 4.)

When to replace the batteries

The status of the remaining battery power is displayed when the batteries are used.

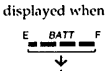

Battery full.

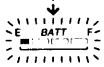

Replace all four batteries with new ones.
"bATTERy" flashes and the tape-corder enters the stop mode when used beyond this point.

Battery life (Approx. hours)

Battery	Playback	Recording (in the recording monitor mode)
Sony alkaline (size AA)	3.5	3 (4*)
Sony rechargeable (size AA)	2	1.5 (2*)

Values for battery life at 20°C.
Battery capacity decreases and battery life becomes shorter in low temperatures.

* When no plug is connected to the PHONES/LINE OUT jack.

Low-power Consumption Mode

If the tape-corder remains in the stop mode for 3 minutes or more, it will enter the low-power consumption mode automatically to conserve the battery.

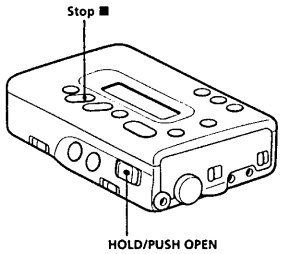

Tips

The tape-corder does not enter the low-power consumption mode when you operate it with the AC power adaptor or car battery.

The tape is unloaded automatically to protect the tape and the tape-corder enters the low-power consumption mode to conserve the battery when the tape-corder is in the stop mode for 3 minutes or more. The clock display appears and the display light turns off in the low-power consumption mode.

To enter the low-power consumption mode manually

1. Make sure that the tape-corder is in the stop mode.
   Press the STOP ■ button if the tape-corder is in the pause mode.
2. Slide the HOLD/PUSH OPEN switch to HOLD.
   The tape-corder enters the low-power consumption mode.

Operating with the AC Power Adaptor or Car Battery

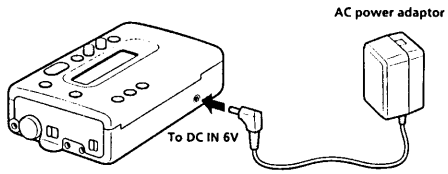

Tips

- When the AC power adaptor or the car battery cord is connected to the DC IN 6V jack of the tape-corder, the internal batteries are automatically disconnected. Power is automatically supplied from the external power source. The tape-corder works with the external power source, not the internal batteries.
- When the AC power plug or the car battery cord is used for an extended period of time, the internal temperature of the tape-corder may rise. This is not a malfunction.

Using the AC power adaptor

Connect the supplied AC power adaptor to the DC IN 6V jack.

Notes on the AC power adaptor

- Use only the supplied AC power adaptor or the optional AC-E60HG/AC-E60AM AC power adaptor. Do not use any other AC power adaptor.

Polarity of the plug

- Make sure that the cassette compartment lid is closed before disconnecting the AC power adaptor or removing the batteries. Otherwise, the cassette compartment lid may not close if the power source is disconnected or removed while the cassette compartment lid is open. In this case, connect the power adaptor or insert the batteries again.

Using the car battery

To operate the tape-corder with the car battery, connect the car battery cord Sony DCC-E260XL (not supplied) to the DC IN 6V jack of the tape-corder. For more details, refer to its Operating Instructions manual.

Connecting with Other Equipment

Connect other equipment to this tape-corder to enable flexible use of the tape-corder.

Note

When using the optional RM-D3K, operate this tape-corder with the AC power adaptor.
With the batteries, wireless remote control functions and digital input/output connections may not operate properly.

Using the optional system adaptor kit RM-D3K

The optional RM-D3K functions as a relay unit between an equipment with digital I/O jack and this tape-corder.

The RM-D3K supports input/output of both optical and coaxial cables. Connect according to the jack of the digital audio equipment you wish to connect.

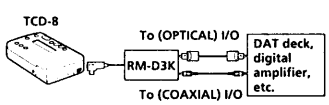

When the RM-D3K is connected

Writing and erasing Start IDs, renumbering program numbers, and using the Music Scan function or Direct Search function are many of the noteworthy features of the RM-D3K.

Using the optional super bit mapping adaptor SBM-1

The optional SBM-1 enables recording of higher quality when connected to this tape-corder.

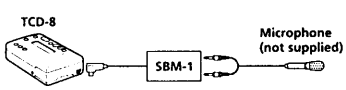

Note

When operating the optional SBM-1 with AC power adaptor, power is supplied from this tape-corder if the power of the SBM-1 is turned off.
When this tape-corder is operated with batteries, disconnect the AC power adaptor from the SBM-1 to conserve the battery.

Using the optional wired remote control RMT-D7

The optional RMT-D7 can be connected to the SBM-1 to enable remote control. However, when operating the SBM-1 with the batteries, the RMT-D7 is not operational if the power of the SBM-1 is turned off. When operating the SBM-1 with the AC power adaptor, the RMT-D7 is operational regardless of whether the power of the SBM-1 is turned on or off.

Serial Copy Management System (SCMS)

The Serial Copy Management System (SCMS) which is incorporated in the domestic DAT equipment prevents repeated digital dubbing from one equipment to another. However, this system lets you record at least one generation of digital prerecorded software via digital connections.

Notes

- There may be cases where the Serial Copy Management System rules are not applicable when the equipment which is not protected with the Serial Copy Management System is used in recording.
- Even if digital dubbing is impossible, you can still dub tape via analog connections.
- When digital dubbing is not possible, the message "COPy PROHIbT" will appear in the display.

* These source examples may not apply to some countries.

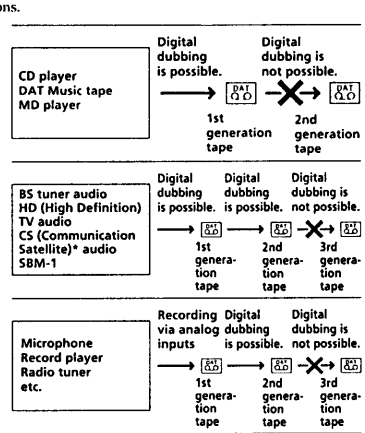

Message Display

The following messages will be displayed while operating this unit.

Message	Description
HOLD	Flashes for about one second when you set the HOLD/PUSH OPEN switch to HOLD. Appears when you press a button while the HOLD function is operating.
NO TAPE	Flashes when there is no tape inside the unit.
TAPE · PROTECT	TAPE, PROTECT indicators appear alternately when the REC button is pressed or when writing/erasing a Start ID in the playback mode using a tape whose record-protect shutter is open.
No INPUT	Flashes when the digital input signal is not received.
COPY · PROHIbT	COPY and PROHIbT indicators appear alternately when the SCMS signal is received.
OPEN	Flashes when the cassette door is open.
LOAD	Flashes while loading a tape.
UNLOAD	Flashes when unloading a tape.
TOP	Flashes when the beginning of a tape*1 is reached.
END	Appears when the end of the tape is reached.
LINEoUT	Flashes when the PHONES (AVLS)/LINE OUT switch is set to the LINE OUT position and the VOLUME button is pressed.
bATTERY	Flashes when the batteries are weak.
EE END	Appears when the End ID*2 is detected. (except for the tape playback)
bLANK	Flashes when the unrecorded part of a tape is detected during playback or fast-forwarding.
WRITE	Appears while the Start IDs are being written.
MIC in or LINE in	Appears when a microphone/audio connecting cable is connected to the tape-corder in the recording, recording pause, and recording monitor modes. Also appears when the REC button is pressed in the recording pause or recording monitor mode.*3
DIGITAL	Appears when the REC button is pressed in the recording pause or recording monitor modes while another equipment is connected via the digital connection.
AVLS	Flashes when the AVLS is set to AVLS ON, or when the AVLS is set to AVLS ON and the VOLUME button is pressed.

*1 Flashes when a new (virgin) tape is used for the first time.

*2 The End ID is a signal which indicates the position of a tape where the recording has ended. You cannot register the End IDs with this unit, however the unit can play back the tapes which are registered with the End IDs and detect them. When the unit detects an End ID during fast forward, it stops there. You can only forward the tape by recording from that point. When the unit detects an End ID during playback, it enters the auto-rewind mode.

*3 If both of a microphone and an audio connecting cable are connected, a microphone has priorty over audio connecting cable, therefore, "MIC in" appears. When a microphone is disconnected "LINE in" appears.

SECTION 2
DISASSEMBLY

Note: Follow the disassembly procedure in the numerical order given.

2-1. LOWER PANEL ASSY

Note) Move the two knobs and the slide switches in their arrow direction when assembling.

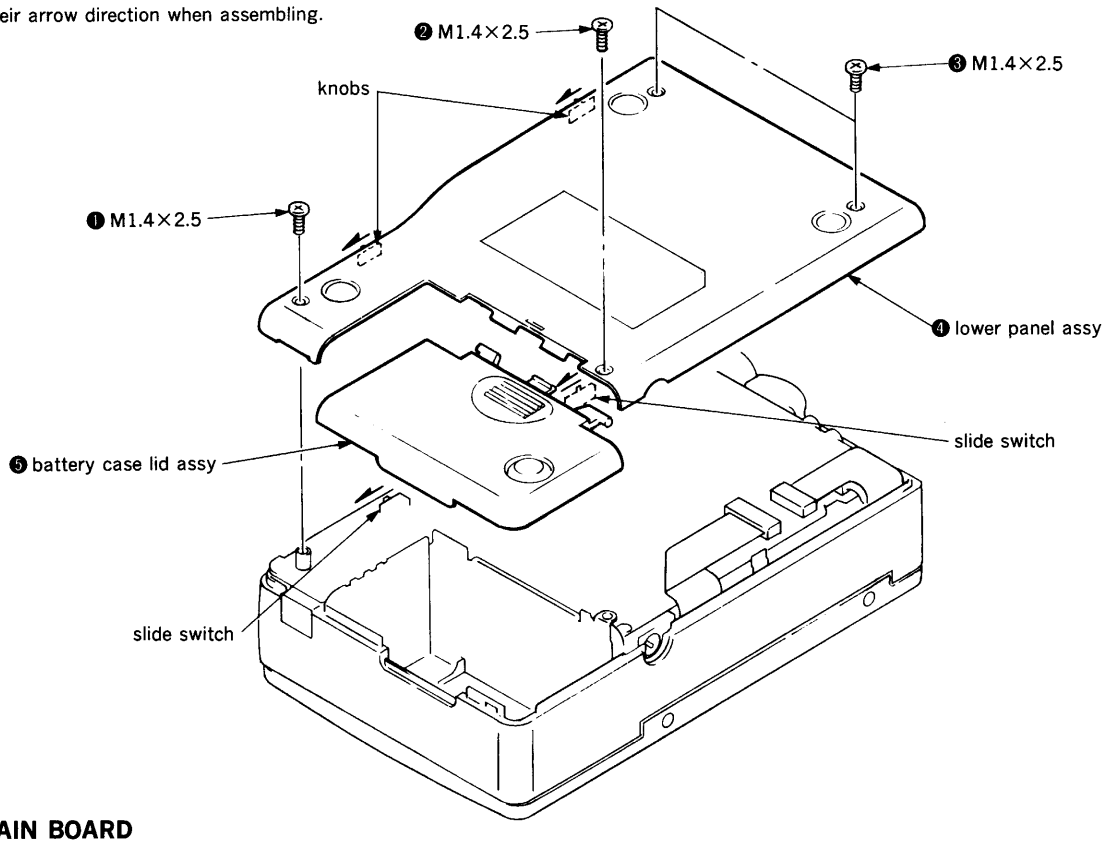

2-2. MAIN BOARD

Note) Fit the two knobs and the slide switches in position when assembling.

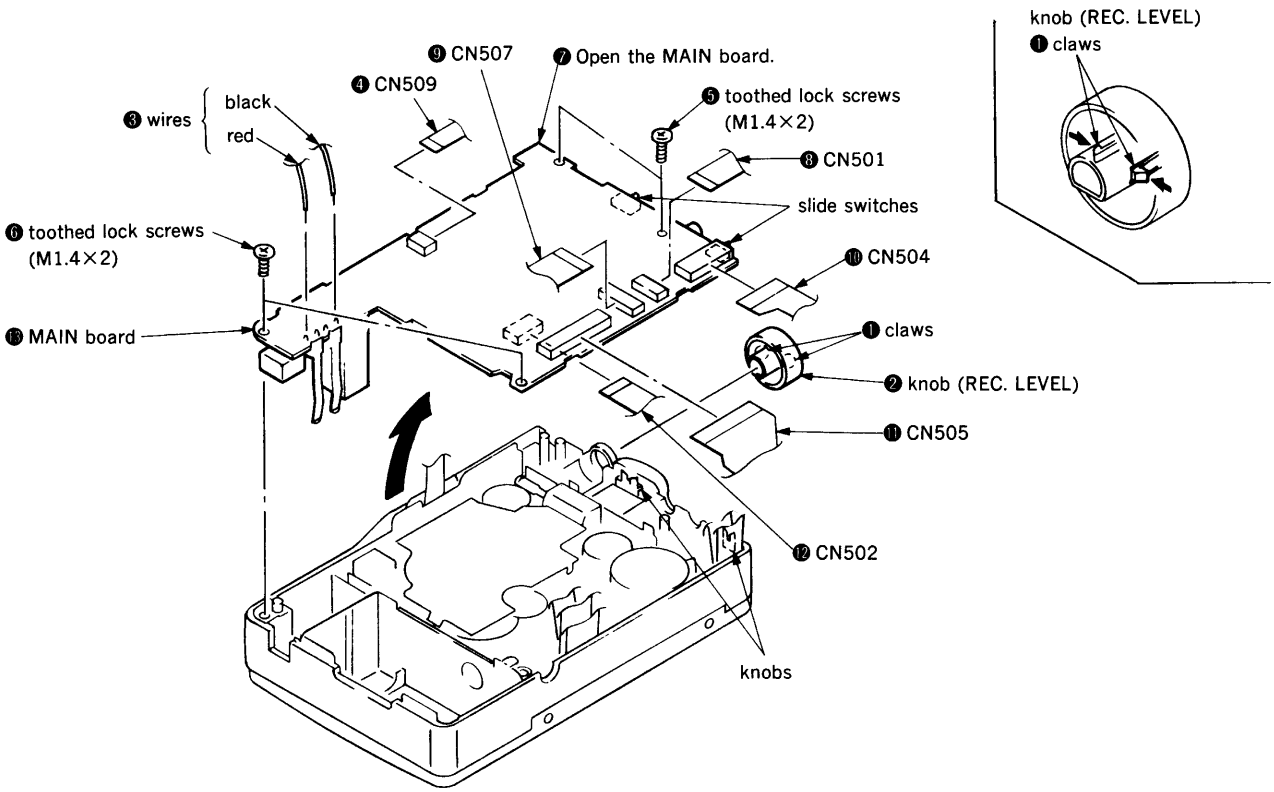

2-3. CASSETTE LID ASSY

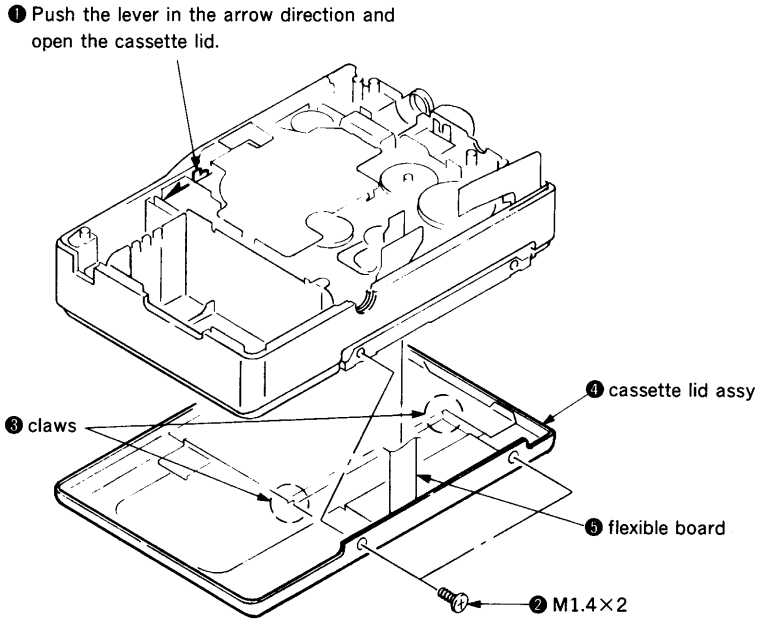

2-4. SYSTEM CONTROL UNIT

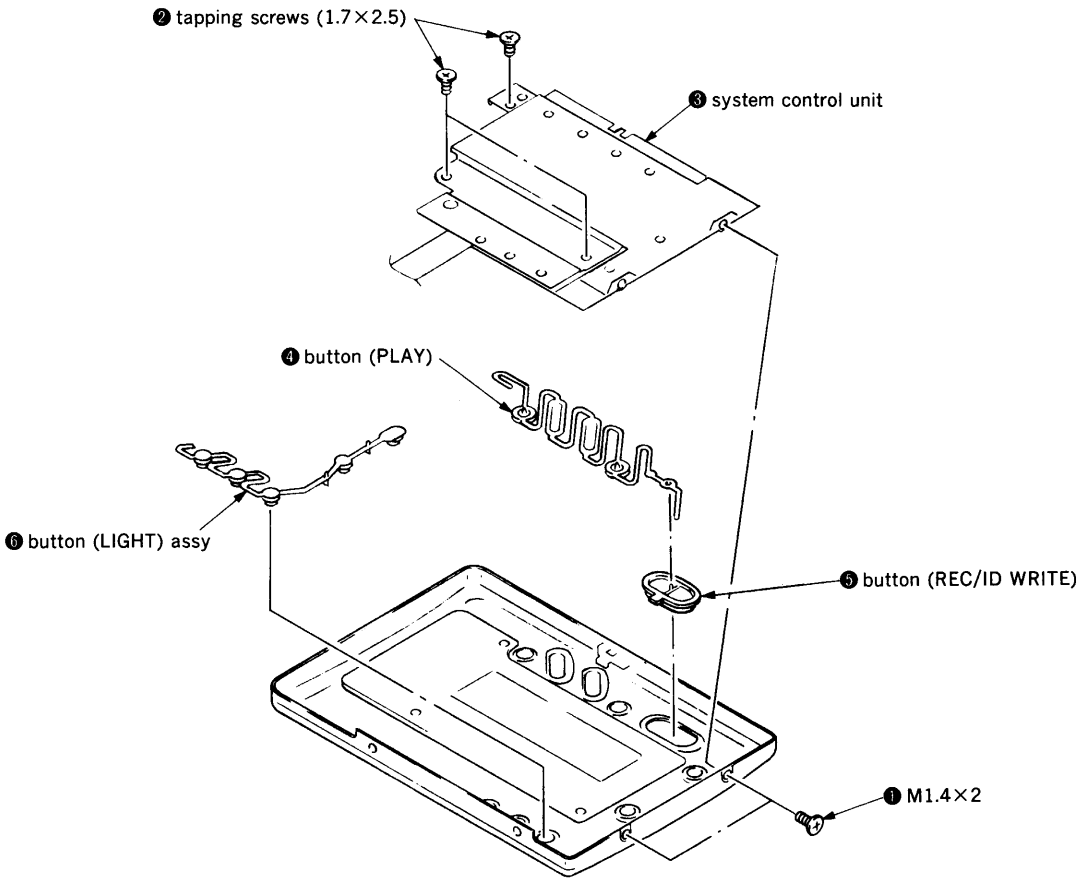

2-5. CABINET

Note) Fit the knobs and the slide switches in position when assembling.

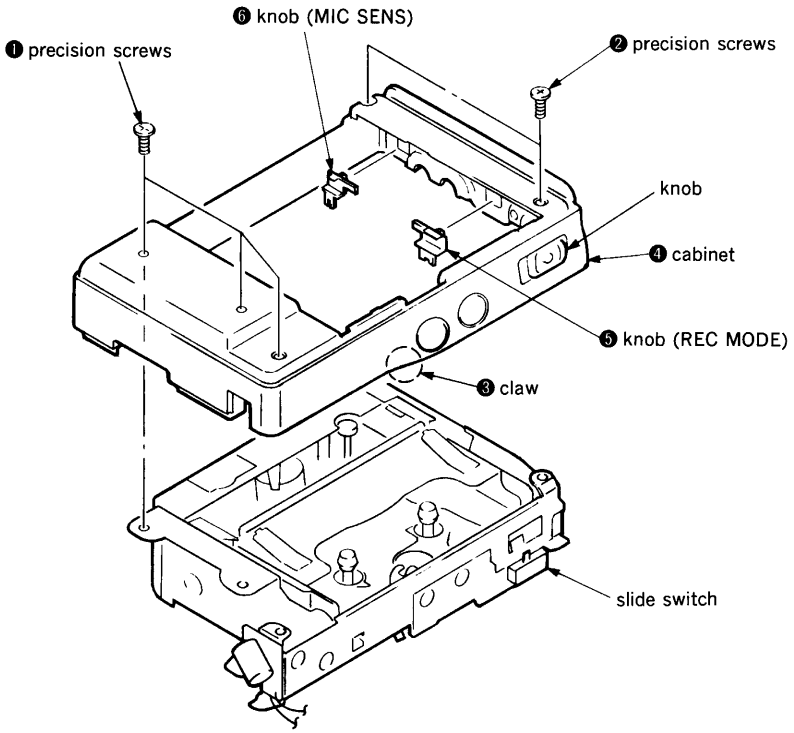

2-6. BRACKET

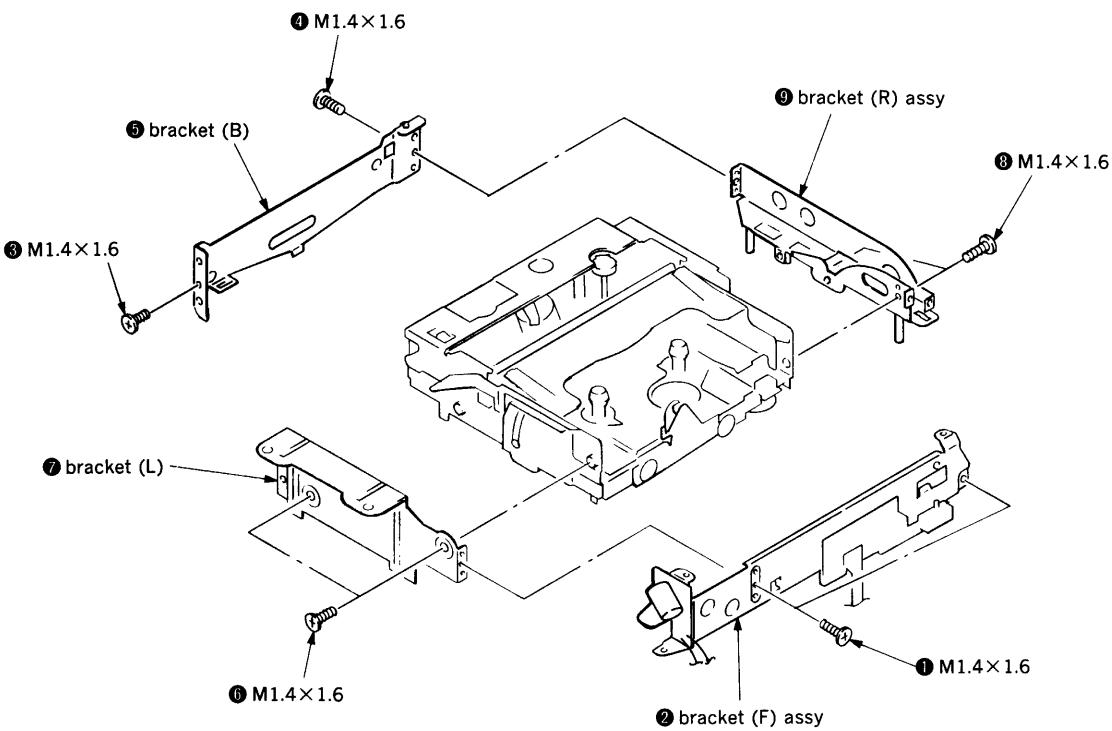

2-7. COVER (TAPE PASS) ASSY

When installing, make sure that the flexible board of the RF module is in between the DC motor and the chassis.

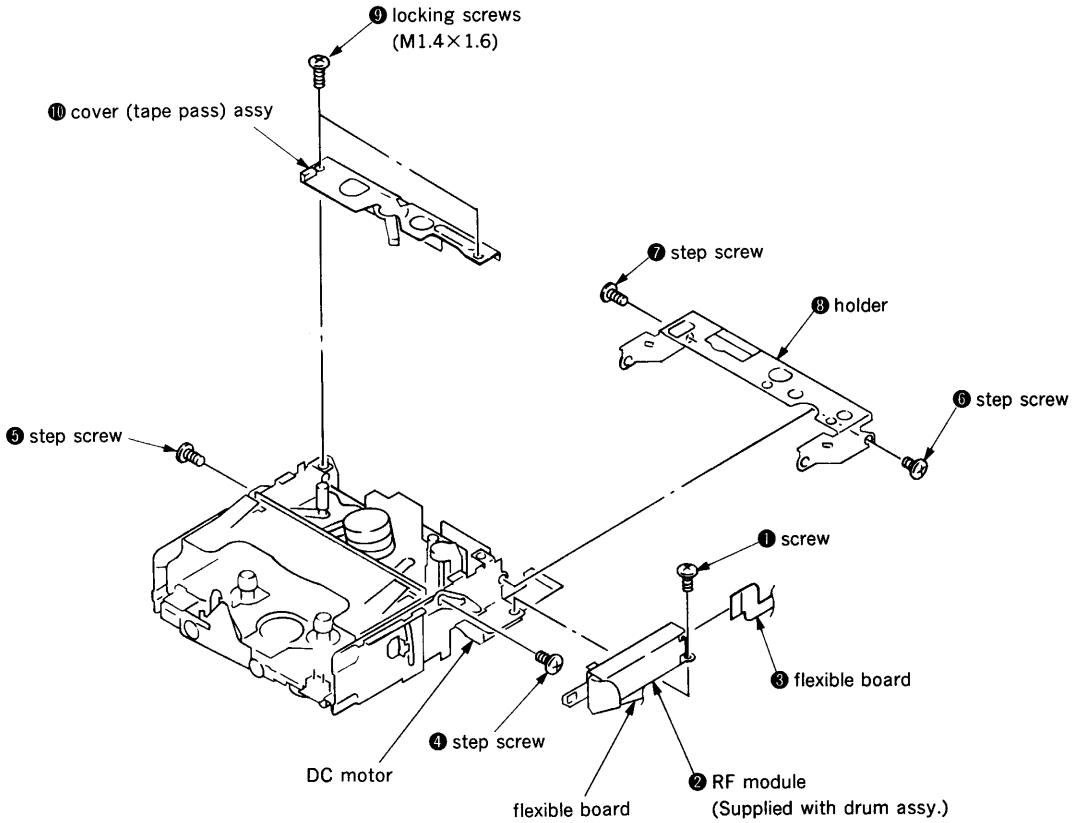

2-8. DRUM ASSY

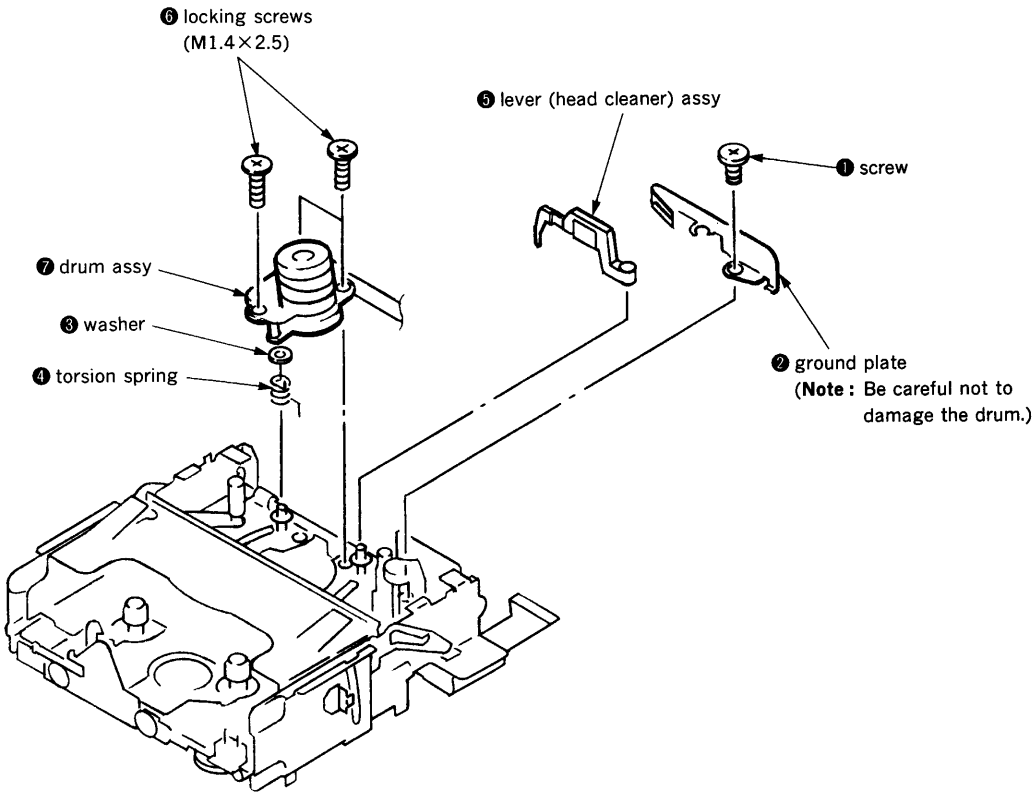

SECTION 3-1
ADJUSTMENTS

NOTES FOR ADJUSTMENT

1. The adjustments should be performed in sequence that they are described.

2. Use the following test tapes:
   TY-7111 (8-909-812-00) for level
   TY-7915 (8-913-932-00) for tape path and SWP
   TY-30B (8-892-358-00) blank tape
   Use the following torque meter:
   TW-7131 (8-909-708-71) for FWD and back tension

3. Set the switch and control to the following positions:
   LP/SP (S501) ·····SP
   HOLD (S704) ·····Released side (in the opposite of → position)

4. Apply 6.0Vdc from the DC IN jack as power supply.

5. For cleaning of the drum, use the chamois leather (2-034-697-00) or four folds of cloth (knitted fabric) wetted with a little amount of alcohol and lightly apply it onto the drum. Then rotate the drum counterclockwise (two to three turns) to clean it.

TEST MODE

1. Enter the Test Mode before performing adjustment.

2. With the power ON, simultaneously press the STOP key, COUNTER key and OPEN button on the set to enter Test Mode. Turn the power OFF to release the Test Mode.

3. When the Test Mode is set, the LCD back light will be lit and the following initial display will appear. Also, the mechanism will be put in the loading state and the segments of the Selected Test Mode Code on the LCD display will be flashing (continuously).

   LCD Initial Display

   00 101 00

Note: During the Test Mode, each key on the set is available to operate it. In this case, malfunction may occur, but it will be released by pressing ■ key on the set. Also, this malfunction will not cause any damage to tape.

4. Types of Test Modes

Test Mode Code	Contents
01	Normal operation mode
02	Error rate measurement mode
30	End sensor check mode
40	Mechanism single operation mode
41	Not used.
42	Tape path adjustment mode

5. Setting of Test Mode Code (remote commander MDR-ED7 is required.)

• Test Mode Display

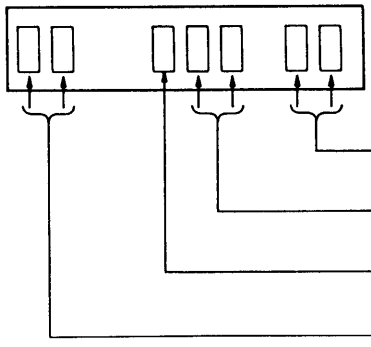

Note : During the Test Mode, the display is switched by pressing the COUNTER key on the set. Select the Test Mode display to check the current Test Mode.

Set Test Mode Code ·····Segments illuminated.

Selected Test Mode Code ·····Segments flashing.

Capstan speed code ·····Capstan speed displayed in test codes 40 and 42.

Error code ·····Segments displayed in case of emergency in test mode.

1) Each time ▶▶ key on remote commander is pressed, the segment value of the Selected Test Mode Code changes as follows :

→ 01 → 02 → 30 → 40 → 41 → 42 →

2) Each time ◀◀ key on remote commander is pressed, the segment value of the Selected Test Mode Code changes is reverse order from the above order.

→ 42 → 41 → 40 → 30 → 02 → 01 →

3) Set the Test Mode Code by pressing ▶ key on remote commander. (After this setting is completed, the Selected Test Mode Code is flashing.)

6. Description of Test Mode Codes

01·····Normal operation mode

This mode produces the same state as the state of the set where the Test Mode is not entered. However, malfunction may occur. So when checking the set in normal operation, do without entering the Test Mode.

02·····Error rate measurement mode

An error rate counter is needed to measure the error rate. Therefore, this mode is not used for servicing.

30·····End sensor check mode

Check without tape.

If an end sensor fault is detected, the error code 13 (T reel side fault) or 14 (S reel side fault) will be displayed continually.

40……Mechanism single operation mode

This mode is available whether tape is present or not.

Without tape, tape end and reel error detections are not performed but holder lock detection is performed.

With FF/REW and ×25FWD/×25REV selected, constant voltage drive is activated without tape while servo is activated with tape.

Press VOL (+) key on remote commander…… (FWD mode)

Press VOL (−) key on remote commander…… (REV mode)

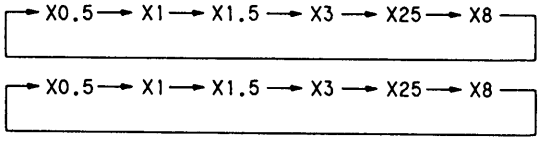

Capstan Speed Code Display	Capstan Speed	Drum Speed
1	×0.5FWD	1000rpm
2	×1FWD	2000rpm
3	×1.5FWD	2000rpm
4	×3FWD	2000rpm
5	×25FWD	2000rpm
6	×8FWD	2000rpm
−1	×0.5REV	1000rpm
−2	×1REV	2000rpm
−3	×1.5REV	2000rpm
−4	×3REV	2000rpm
−5	×25REV	2000rpm
−6	×8REV	2000rpm

41……Constant voltage drive mode

Not used.

42……Tape path adjustment mode

This mode displays the capstan speed and it is effective only when tape is mounted.

Press VOL (+) key on remote commander…… (FWD mode)

Press VOL (−) key on remote commander…… (REV mode)

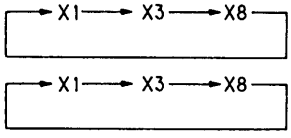

Capstan Speed Code Display	Capstan Speed	Drum Speed
1	×1FWD	2000rpm
2	×3FWD	2000rpm
3	×8FWD	2000rpm
−1	×1REV	2000rpm
−2	×3REV	2000rpm
−3	×8REV	2000rpm

7. Error Code List

Code No.	Block	Contents
- -		No error (no emergency)
01—09	Control motor (encoder)	Unable to detect the position*1
10	Mechanism deck	Loading not completed
11		Unloading not completed
12		No eject
13		End sensor fault (T side)
14		End sensor fault (S side)
15		DEW detected
20	Drum	Drum motor won't rotate
21		Drum servo not locked
30	Capstan	Capstan motor won't rotate
31		Speed not locked
40	Reel	T reel FG not detected
41		S reel FG not detected
42		Measure abnormally ended

* 1 If the position of the rotary encoder is not detected, the position number for that position is preceded with 0 and this value is displayed as the error code. (See below)

EJECT	: 01	Load	: 04	FF	: 07
Unload	: 02	REV	: 05	STOP	: 08
CASIN	: 03	FWD	: 06	REW	: 09

If an emergency occurs during each test mode, the error code will be displayed.

LOCATIONS OF PARTS ASSOCIATED WITH ADJUSTMENTS

—MECHANISM—

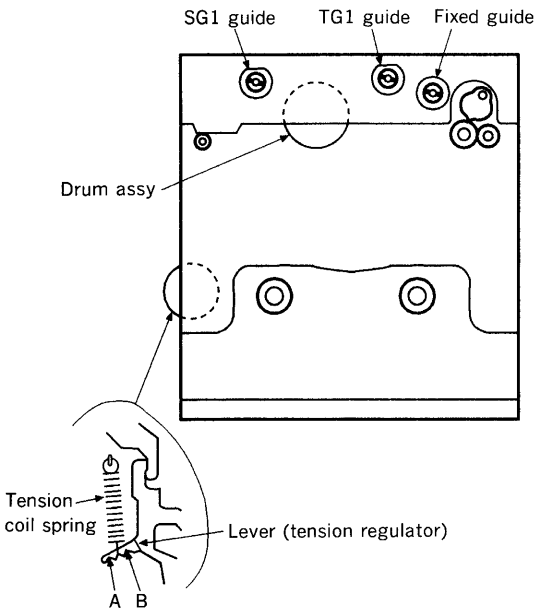

—MAIN BOARD—

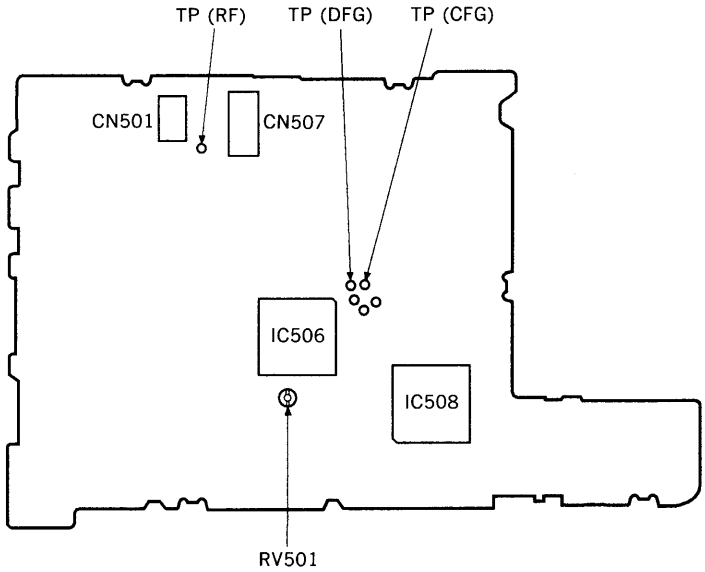

SECTION 3-2
MECHANICAL ADJUSTMENTS

These adjustment should be always performed when the drum was replaced.

TAPE PATH ADJUSTMENT

※ Only when checking the tape path, perform Items 6 to 9.

1. Enter the Test Mode, mount test TY-7915, and set tape near the center.
2. Set test mode code 42 and press VOL (+) key on remote commander. (×1FWD)
3. Lower SG1 guide (clockwise) and dislodge tape (Fig-1).
4. Lower TG1 guide (clockwise) and dislodge tape (Fig-2). Then, turn TG1 guide counterclockwise and adjust so that the right edge of the RF waveform (Fig-3) is at right angle.
5. Turn SG1 guide counterclockwise and adjust so that the left edge of the RF waveform (Fig-4) is at right angle.

   At this time, the lower flange of fixed guide should not be in contact with tape.
   Also, tape should run along the upper flanges of SG1 and TG1 guides.

—RF WAVEFORM—

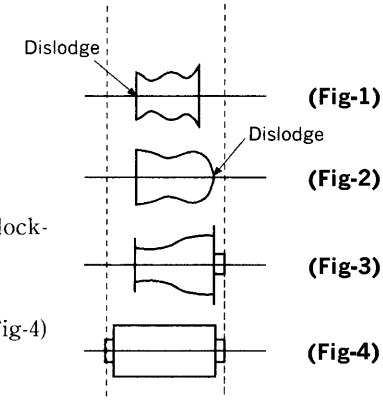

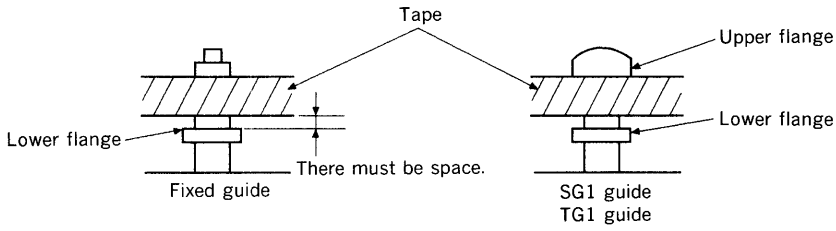

6. Check the RF waveform and fine adjust SG1 and TG1 guides.

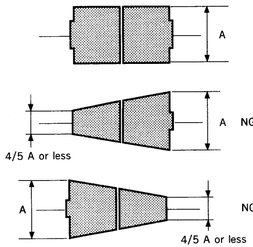

Fine adjust SG1 guide so as to obtain the waveform as shown in Fig-5.

Fine adjust TG1 guide so as to obtain the waveform as shown in Fig-5.

Note: SG1 guide and TG1 guide should not be adjusted alternately. After one guide has been adjusted, the other guide should be adjusted.

7. 1) Press STOP button, then press OPEN button to take out tape once.
   2) Mount tape again and press VOL (+) key on remote commander to select ×1FWD.
   3) Check the peak value and width of variation of the RF waveform.

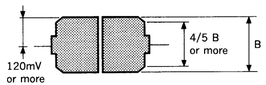

   4) If the RF waveform does not satisfy the check values, repeat Items 6 to 7.

8. Press VOL (+) or VOL (−) key on remote commander to select ×1FWD or ×1REV.
   Adjust the fixed guide so that the lower flange of the guide is positioned along tape. (No tape curl should be present.)

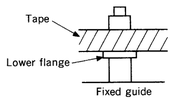

9. After performing ×8FWD, ×8REV, ×3FWD, and ×3REV operations, confirm that the RF waveform is state.

TORQUE CHECK

Preparation:
Remove the cassette lid from the cassette holder.

(×1FWD)
1. Set the Test Mode.
2. Set test mode code 40.
3. Mount torque meter TW-7131.
4. Press VOL (+) key on remote commander to select ×1FWD mode.
5. Check the torque meter.

   FWD take-up torque 4.5—7.0g•cm (0.063—0.097oz•inch)
   FWD back tension 3.0—5.5g•cm (0.042—0.076oz•inch)

6. If the back tension check value is not satisfied, place the tension coil spring set to the lever (tension regulator) to position either A or B. Check the back tension again.

(×1REV)
1. Perform the above items 1 to 3.
2. Press VOL (−) key on remote commander to select ×1REV mode.
3. Check the torque meter.

   REV take-up torque 5.5—11.0g•cm (0.077—0.152oz•inch)
   REV back tension 6.0—12.0g•cm (0.084—0.166oz•inch)

SPEED CHECK

(Capstan FG)
1. Connect frequency counter to TP (CFG).
2. Set the Test Mode.
3. Set test mode code 40.
4. Mount test tape TY-30B.
5. Press VOL (+) key on remote commander and read the frequency in ×0.5FWD, ×1FWD, ×1.5FWD, ×3FWD, and ×8FWD modes.

Mode	Frequency
×0.5FWD	296Hz±5Hz
×1FWD	592Hz±5Hz
×1.5FWD	888Hz±3Hz
×3FWD	1776Hz±3Hz
×8FWD	4736Hz±5Hz

(Drum FG)
1. Connect frequency counter to TP (DFG).
2. Perform the above Items 2 to 4.
3. Press VOL (−) key on remote commander and check the frequency in ×0.5FWD and ×1FWD.

Mode	Frequency
×0.5FWD	400Hz±1Hz
×1FWD	800Hz±1Hz

SECTION 3-3
ELECTRICAL ADJUSTMENTS

These adjustment should be always performed when the drum was replaced.

SWP (SWITCHING PULSE) ADJUSTMENT

Preparation: Oscilloscope CH-1 : AC 100mV/DIV
CH-2 : DC 2V/DIV
TRIG : CH-2

1. Connect CH-1 of oscilloscope to TP (RF) and CH-2 to CN501 pin ⑧ (SWP).
2. Set the Test Mode.
3. Set test mode code 42.
4. Mount test tape TY-7915.
5. Press VOL (+) key on remote commander to select ×1FWD.
6. Use RV501 to adjust the period (T) between SWP waveform and RF waveform.

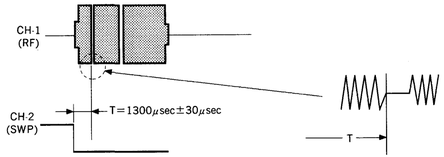

SECTION 4
DIAGRAMS

4-1. BLOCK DIAGRAM—MD SECTION—

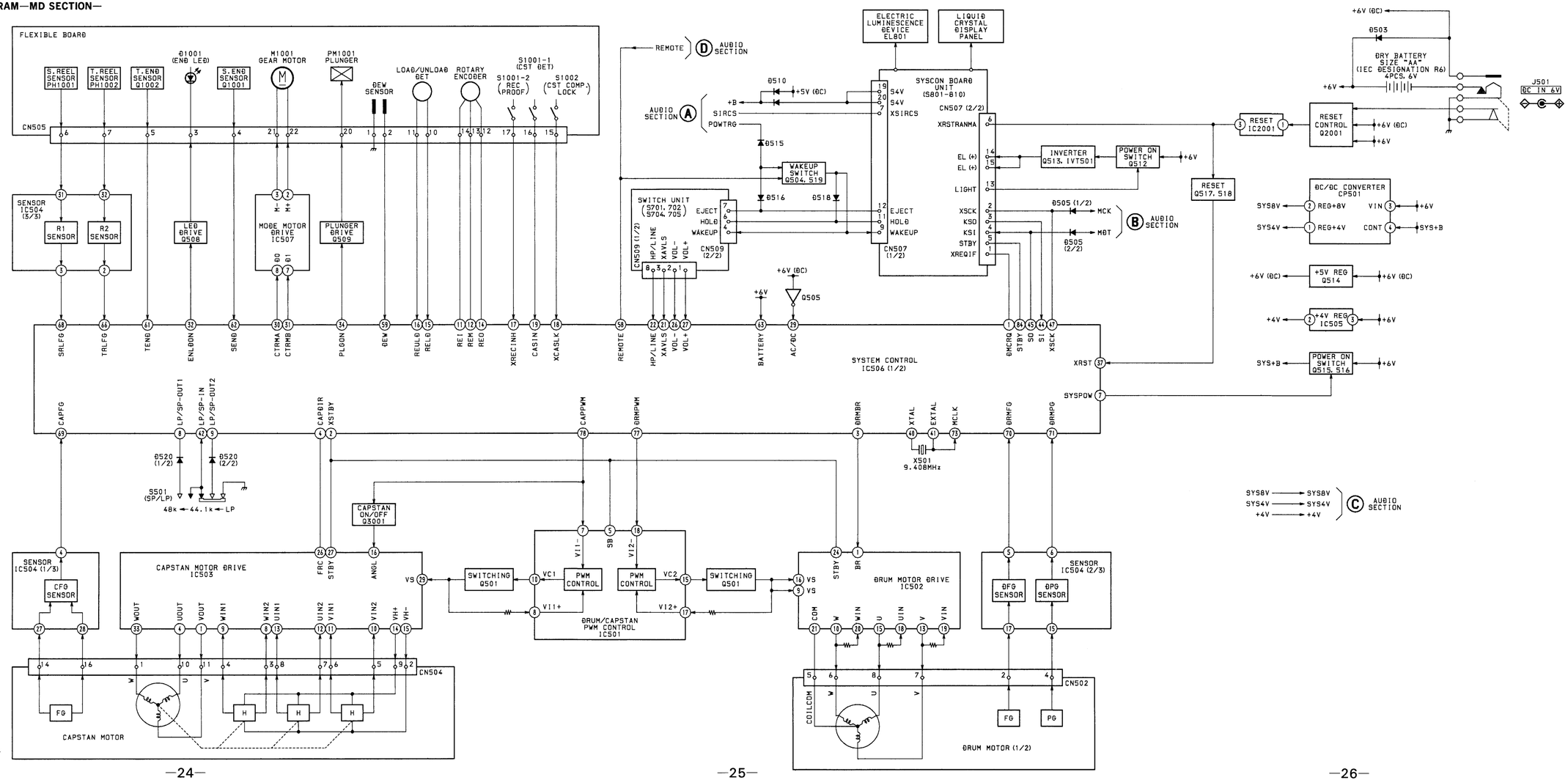

4-2. BLOCK DIAGRAM—AUDIO SECTION—

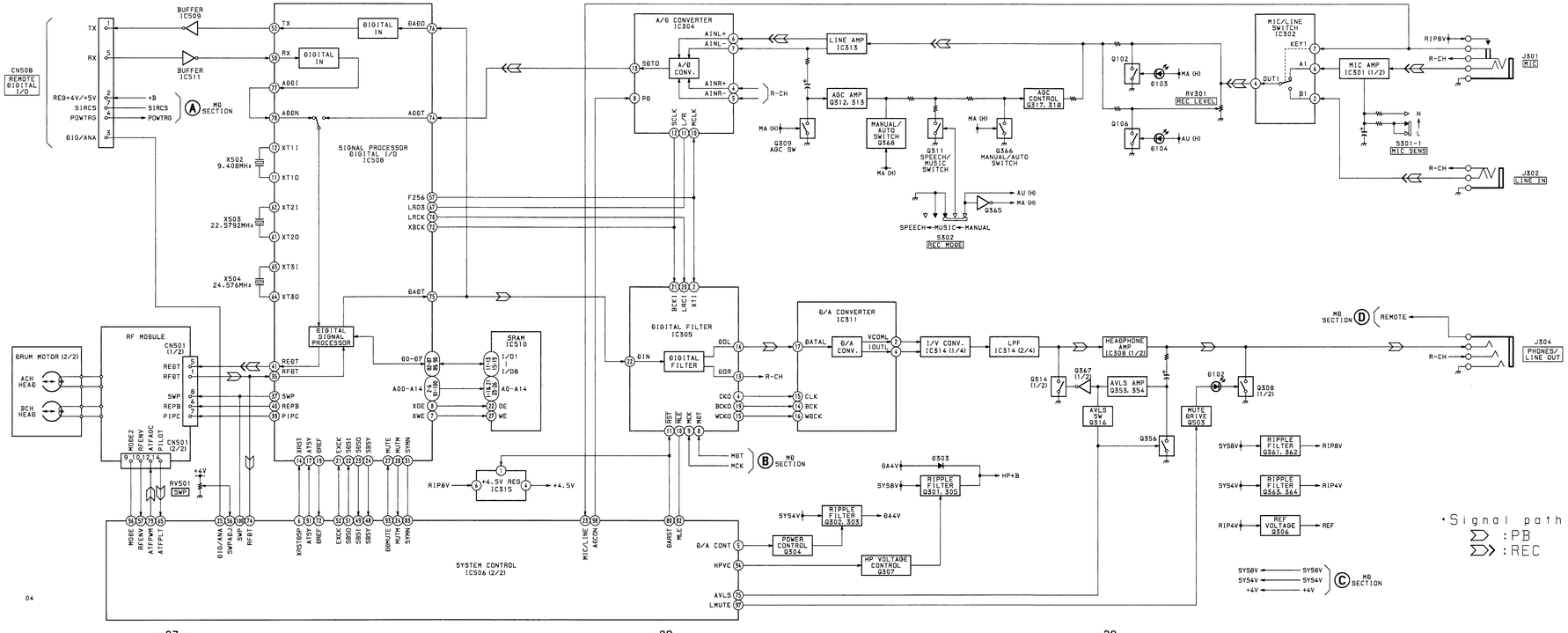

• Waveforms

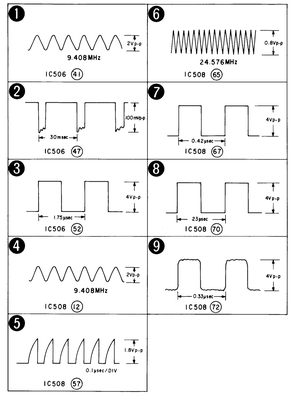

4-3. PRINTED WIRING BOARDS

●Semiconductor Location

Ref. No.	Location	Ref. No.	Location
D102	B-3	Q106	E-26
D103	D-2	Q202	E-26
D104	D-26	Q206	E-26
D202	B-3	Q301	E-4
D203	E-26	Q302	D-24
D204	D-26	Q303	E-24
D301	B-27	Q304	E-24
D303	E-5	Q305	E-5
D331	E-25	Q306	I-2
D332	B-24	Q307	E-5
D340	E-25	Q308	B-2
D341	B-25	Q309	F-4
D501	G-20	Q311	E-3
D502	G-19	Q312	E-25
D503	H-19	Q313	F-4
D505	C-6	Q314	B-4
D506	C-10	Q316	B-24
D507	B-10	Q317	E-3
D508	C-10	Q318	E-3
D509	B-9	Q331	E-26
D510	B-10	Q332	E-25
D511	D-10	Q333	B-25
D512	C-8	Q334	B-24
D515	C-7	Q353	B-25
D516	C-7	Q354	B-25
D517	C-6	Q355	B-25
D518	B-7	Q356	B-25
D520	B-19	Q357	E-25
D1001	G-13	Q361	D-25
		Q362	D-25
IC301	G-26	Q363	I-3
IC302	D-27	Q364	H-3
IC303	G-26	Q365	D-2
IC304	G-24	Q366	E-2
IC305	B-23	Q367	B-5
IC308	C-26	Q368	E-4
IC311	B-24	Q501	F-20
IC313	G-4	Q502	F-20
IC314	C-25	Q503	E-7
IC315	D-25	Q504	C-8
IC501	F-20	Q505	C-7
IC502	F-7	Q508	H-6
IC503	G-23	Q509	G-6
IC504	E-8	Q512	B-17
IC505	D-9	Q513	F-15
IC506	D-22	Q514	D-10
IC507	G-22	Q515	C-18
IC508	C-20	Q516	C-18
IC509	D-19	Q517	H-23
IC510	C-8	Q518	H-23
IC511	D-10	Q519	B-8
IC2001	G-22	Q1001	H-11
		Q1002	H-14
PH1001	I-12	Q2001	F-22
PH1002	H-13	Q3001	F-22
Q102	D-27		

Note:

- ● : parts extracted from the conductor side.
- ■ : parts mounted on the conductor side.
- ▬ : Pattern on the side which is seen. (The other layer's patterns are not indicated.)

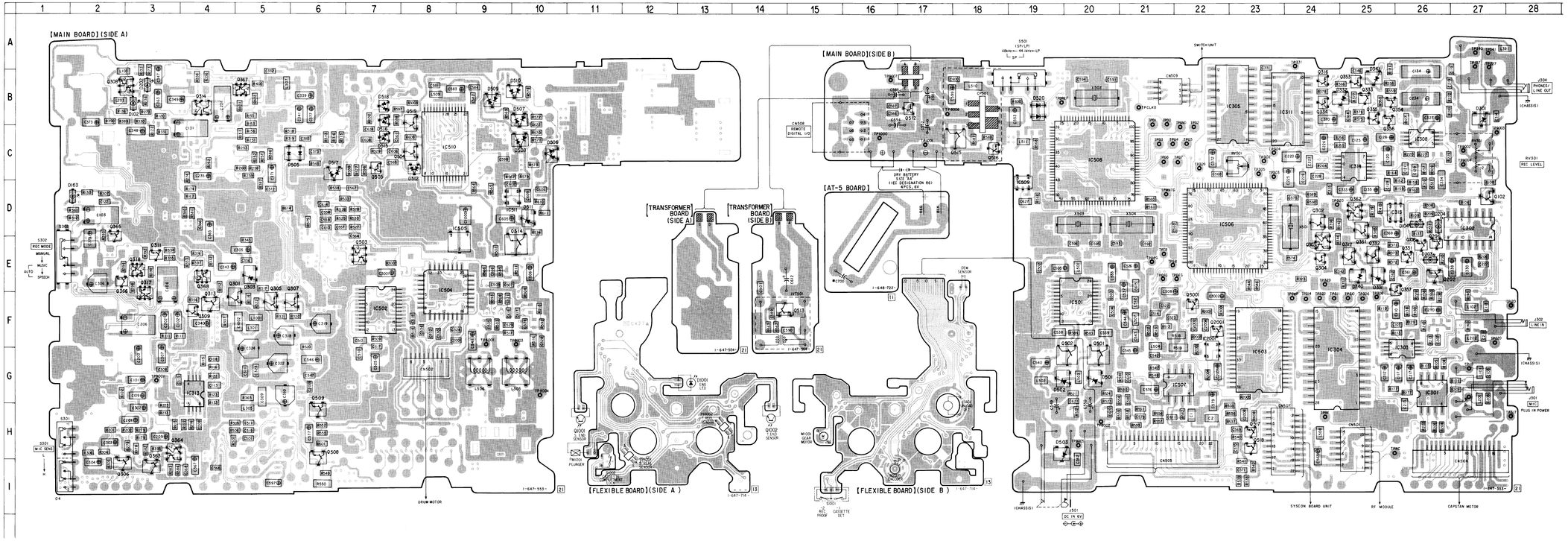

4-4. SCHEMATIC DIAGRAM—MAIN SECTION—

• Refer to page 31 for Waveforms and page 46 for IC Block Diagrams.

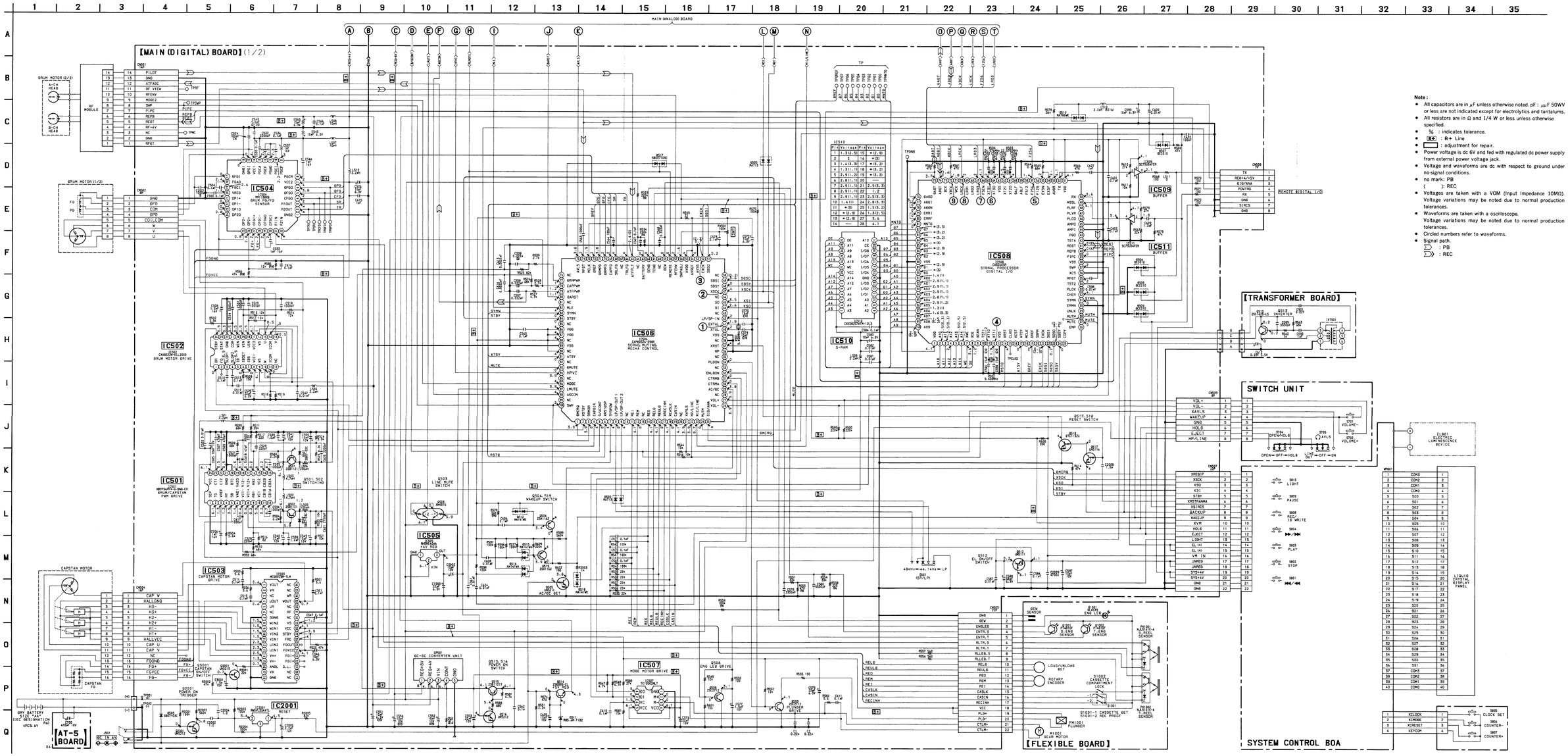

Note :

- All capacitors are in μF unless otherwise noted. pF : μμF 50WV or less are not indicated except for electrolytics and tantalums.
- All resistors are in Ω and 1/4 W or less unless otherwise specified.
- % : indicates tolerance.
- B+ : B+ Line.
- ▭ : adjustment for repair.
- Power voltage is dc 6V and fed with regulated dc power supply from external power voltage jack.
- Voltage and waveforms are dc with respect to ground under no-signal conditions.
- no mark: PB
  ( ): REC
- Voltages are taken with a VOM (Input Impedance 10MΩ). Voltage variations may be noted due to normal production tolerances.
- Waveforms are taken with a oscilloscope. Voltage variations may be noted due to normal production tolerances.
- Circled numbers refer to waveforms.
- Signal path.
  ⟩ : PB
  ⟩⟩ : REC

4-5. SCHEMATIC DIAGRAM—ANALOG SECTION—

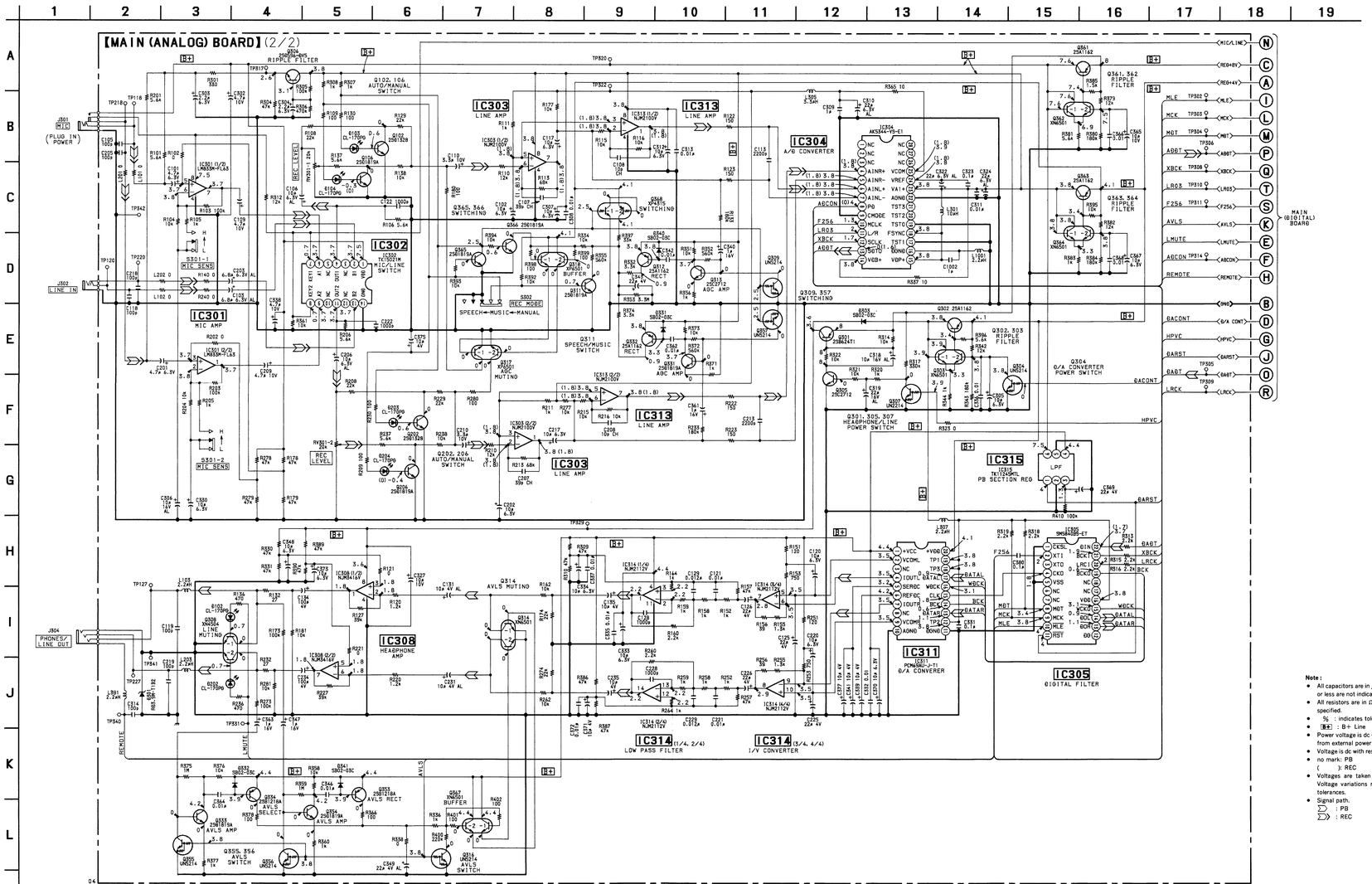

Note :

- All capacitors are in μF unless otherwise noted. pF : μμF 50WV or less are not indicated except for electrolytics and tantalums.
- All resistors are in Ω and 1/4 W or less unless otherwise specified.
- % : indicates tolerance.
- B+ : B+ Line
- Power voltage is dc 6V and fed with regulated dc power supply from external power voltage jack.
- Voltage is dc with respect to ground under no-signal conditions.
- no mark: PB
  ( ) : REC
- Voltages are taken with a VOM (Input Impedance 10MΩ). Voltage variations may be noted due to normal production tolerances.
- Signal path.
  ▷▷ : PB
  ▷▷ : REC

• IC Block Diagrams

IC302 TK15021M

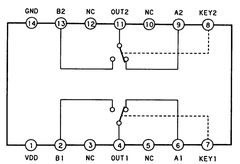

IC304 AK5344-VS-E1

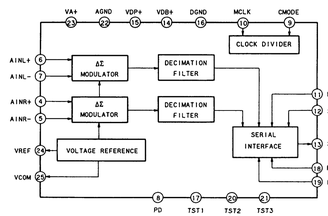

IC305 SM5840BS-ET

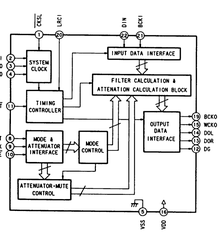

IC311 PCM68UAU-J-T1

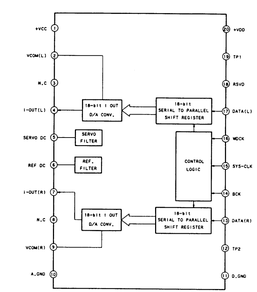

IC501 MB3796PFV-G-BND-ER

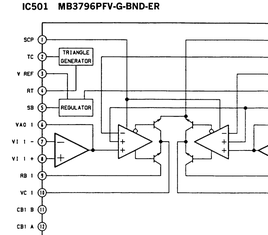

IC502 CXA8022W-ELL2000

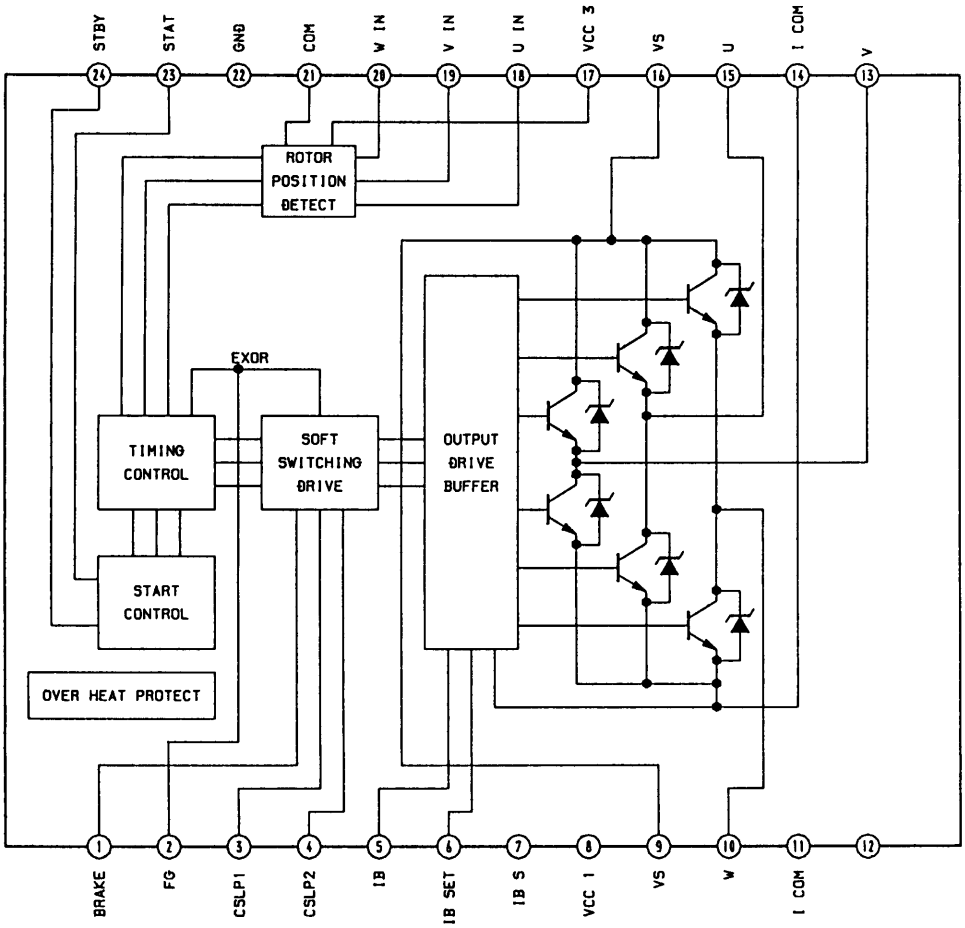

IC504 MM1138XQ

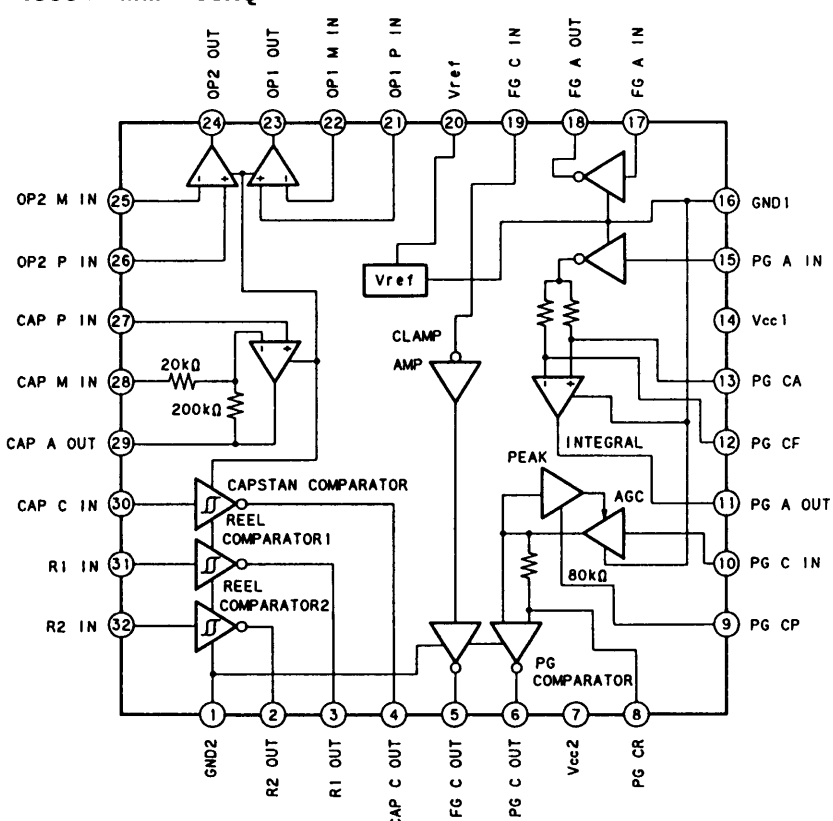

IC503 MCD002BM-TLM

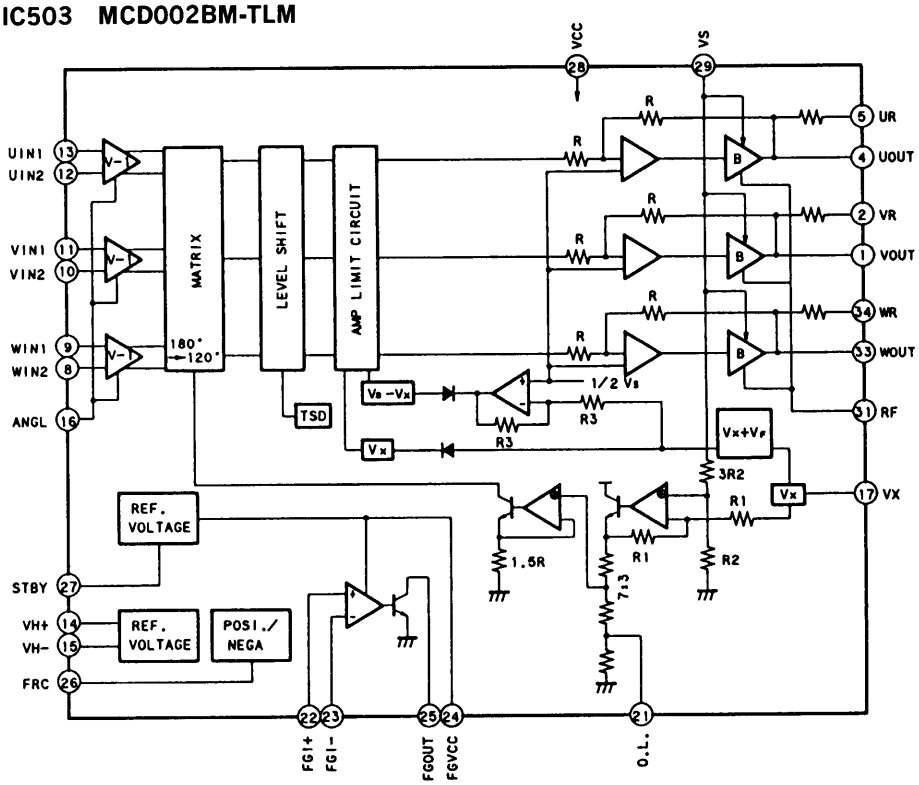

IC507 TK10502MTL

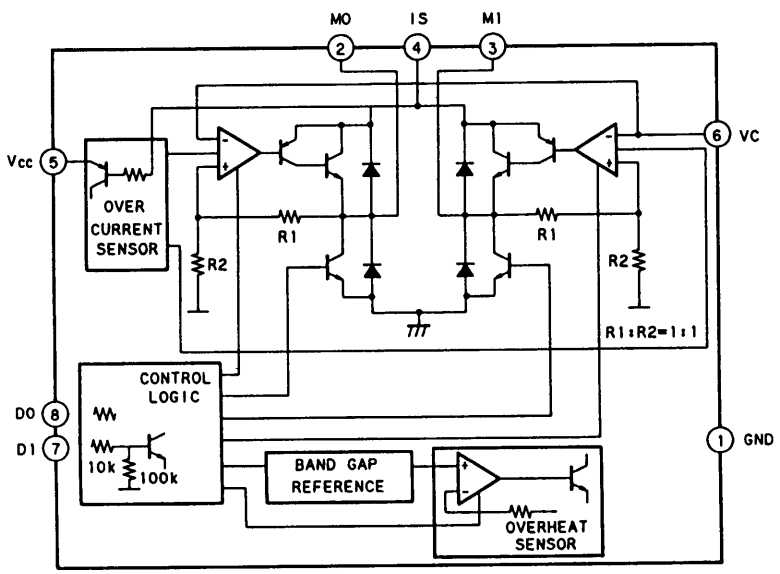

4-6. IC PIN DESCRIPTION

• IC506 CXP80524-098R

Pin No.	Pin Name	I/O	Pin Function
1	DMCRQ	O	Serial communication request signal to LCD micro-computer of system control board unit. ("L" : Communication mode)
2	XSTBY	O	MB3796, CXA8022W and MCD002BM standby signal. ("L" : Standby mode)
3	DRMBR	O	Drum motor brake signal ("H" : Brake)
4	CAPDIR	O	Capstan motor rotation direction control signal ("H" : FWD)
5	DACONT	O	Power ON/OFF signal of D/A converter section. ("L" : Power ON)
6	XRSTDSP	O	CXD2605 reset signal ("L" : Reset)
7	SYSPAW	O	System power ON/OFF signal ("H" : Power ON)
8	LP/SP-OUT1	O	LP/SP switch detect 1
9	LP/SP-OUT2	O	LP/SP switch detect 2
10		—	Not used
11	REI	I	Rotary encoder input 1
12	REM	I	Rotary encoder input 2
13		—	Not used
14	REO	I	Rotary encoder input 3
15	RELD	I	Load detection signal ("L" : Load completion)
16	REULD	I	Unload detection signal ("L" : Unload completion)
17	XRECINH	I	REC proof switch input ("L" : REC prohibition)
18	XCASLK	I	Cassette compartment lock switch input ("L" : Cassette compartment lock)
19	CASIN	I	Cassette insert detection ("H" : Cassette insert)
20		—	Not used
21	XAVLS	I	AVLS switch input ("L" : AVLS)
22	HP/LINE	I	HEADPHONE/LINE OUT switch input ("L" : LINE OUT)
23	MIC/LINE	I	MIC/LINE IN switch input ("H" : LINE IN)
24	MUTM	I	Mute output detection of CXD2605. ("H" : Mute)
25	DIG/ANA	I	DIGITAL/ANALOG switch input ("L" : DIGITAL)
26	VOL−	I	VOLUME DOWN switch input ("L" : VOLUME DOWN)
27	VOL+	I	VOLUME UP switch input ("L" : VOLUME UP)
28		—	Not used
29	AC/DC	I	AC/DC power detection ("L" : AC power)
30	CTRMA	O	Control motor control signal
31	CTRMB	O	Control motor control signal
32	ENLDON	O	Tape top/end LED ON/OFF signal ("H" : LED ON)
33		—	Not used
34	PLGON	O	Plunger ON/OFF signal ("H" : Plunger ON)
35		—	Not used
36	MP	I	Fix to GND.
37	XRST	I	Reset input
38		—	Not used
39	VSS	—	GND
40	XTAL	O	Crystal oscillator (9.408MHz) output
41	EXTAL	I	Crystal oscillator (9.408MHz) input
42	LP/SP-IN	I	LP/SP switch input ("L" : LP)
43		—	Not used
44	SI	I	Serial data input from system control board unit.
45	SO	O	Serial data output to system control board unit and digital filter.
46		—	Not used
47	XSCK	O	Serial clock output to system control board unit and digital filter.
48	SBSY	I	Communication request signal from CXD2605. (Down edge to start communication)
49	SBSI	I	Serial data input from CXD2605.
50		—	Not used

Pin No.	Pin Name	I/O	Pin Function
51	SBSO	O	Serial data output to CXD2605.
52	EXCK	O	Serial clock output to CXD2605.
53	AVSS	—	Analog port GND
54	AVREF	—	Analog port reference GND
55	AVDD	—	+5V
56	SWPADJ	I	Switching pulse delay adjustment voltage input
57	RFENV	I	RF envelope detection input
58	REMOTE	I	Headphone remote control signal input
59	DEW	I	Dew sensor input ("L": Dew)
60		—	Not used
61	TEND	I	Tape top sensor input ("L": Tape top)
62	SEND	I	Tape end sensor input ("L": Tape end)
63	BATTERY	I	Battery voltage level detection
64		—	Not used
65	ATFPLT	I	ATF pilot detection signal
66	TRLFG	I	Reel FG input of take up side (24 per 1 rotation)
67		—	Not used
68	SRLFG	I	Reel FG input of supply side (24 per 1 rotation)
69	CAPFG	I	Capstan FG input (360 per 1 rotation)
70	DRMFG	I	Drum FG input (24 per 1 rotation)
71	DRMPG	I	Drum PG input
72	DREF	I	Drum reference signal (LP mode: 16.7Hz, SP mode: 33.3Hz)
73	MCLK	I	Channel clock (9.408MHz)
74	RFDT	I	RF signal input
75	AVLS	O	AVLS ON signal
76		—	Not used
77	DRMPWM	O	Drum motor control PWM output (Carrier frequency: 36.75kHz)
78	CAPPWM	O	Capstan motor control PWM output (Carrier frequency: 36.75kHz)
79	ATFPWM	O	ATF gain control amplifier control PWM output (Carrier frequency: 36.75kHz)
80	DARST	O	Reset signal to D/A converter
81		—	Not used
82	MLE	O	Serial data take up signal to digital filter. (Up edge to take up)
83	SYMN	I	C1 syndrome pulse input
84	STBY	I	Sleep input ("H": Sleep)
85		—	Not used
86, 87	VDD	—	+5V
88		—	Not used
89	VSS	—	GND
90		—	Not used
91	ASTY	O	ATF sync output
92		—	Not used
93	DMUTE	O	Digital mute signal ("H": Mute)
94	HPVC	O	Headphone amplifier voltage control signal
95		—	Not used
96	MODE	O	Mode setting of RF amplifier ("H": REC current ON)
97	LMUTE	O	LINE OUT mute signal ("H": Mute)
98	ADCON	O	A/D converter ON/OFF signal
99		—	Not used
100	SWP	O	Switching pulse output ("L": Ach head)

SECTION 5
EXPLODED VIEWS

NOTE:
- The mechanical parts with no reference number in the exploded views are not supplied.
- Items marked "*" are not stocked since they are seldom required for routine service. Some delay should be anticipated when ordering these items.
- -XX and -X mean standardized parts, so they may have some difference from the original one.
- Color Indication of Appearance Parts
  Example :
  KNOB, BALANCE (WHITE)... (RED)
  ↑ Parts Color ↑ Cabinet's Color
- Accessories and packing materials are given in the last of this parts list.

5-1. CABINET SECTION

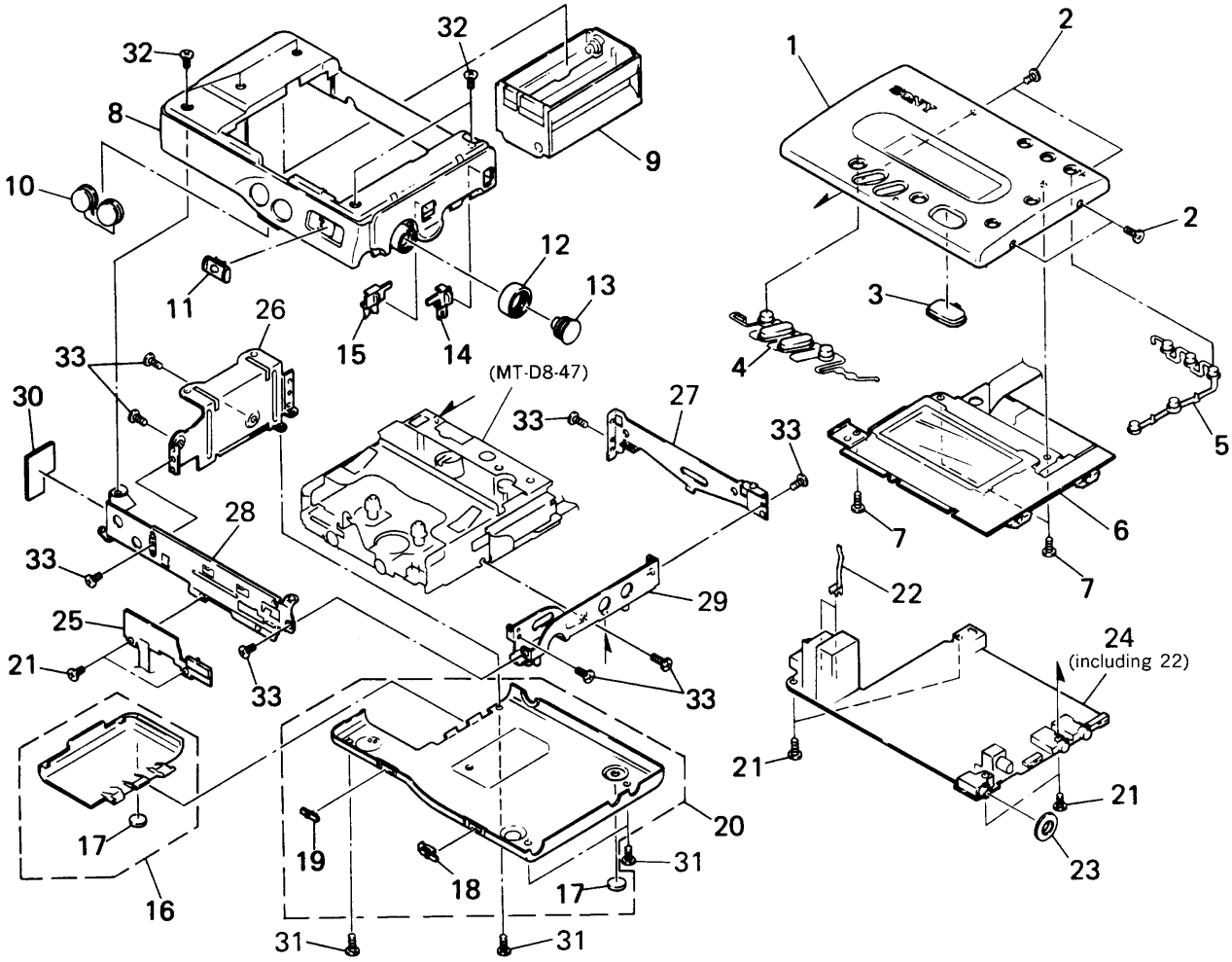

Ref. No.	Part No.	Description	Remark
1	X-4946-398-1	LID ASSY, CASSETTE	
2	3-704-197-13	SCREW (M1.4X2.0), LOCKING	
3	3-387-471-11	BUTTON (REC/ID WRITE)	
4	3-387-470-02	BUTTON (⏮/◀◀, STOP, PLAY, ▶▶/⏭)	
5	X-4946-501-1	BUTTON (CLOCK, COUNTER, RESET, LIGHT, PAUSE)	
6	1-467-043-21	SYSTEM CONTROL BOARD UNIT	
7	3-318-382-61	SCREW (1.7X2.5), TAPPING	
8	4-976-965-01	CABINET	
9	X-4950-538-1	CASE ASSY, BATTERY	
10	3-387-448-11	BUTTON (VOLUME +/-)	
11	X-4946-397-1	KNOB (HOLD) ASSY	
12	3-387-453-01	KNOB (REC.RING)	
13	3-387-452-01	KNOB (REC.LEVEL)	
14	3-387-455-01	KNOB (MIC SENS)	
15	3-387-454-01	KNOB (REC MODE)	
16	X-4946-399-1	LID ASSY, BATTERY CASE	
17	3-387-476-01	FOOT, RUBBER	
18	3-387-464-01	KNOB (AVLS)	
19	4-977-110-01	KNOB (SP/LP)	
20	X-4946-401-1	PANEL ASSY, LOWER	
21	3-335-797-01	SCREW (M1.4X2), TOOTHED LOCK	
22	3-387-477-11	TERMINAL (MAIN), BATTERY	
23	3-387-466-01	RING (PHONES/LINE OUT), ORNAMENTAL	
24	A-3276-893-A	MAIN BOARD, COMPLETE	
25	1-467-044-11	SWITCH UNIT (BLOCK TYPE)	
* 26	3-387-443-01	BRACKET (L)	
* 27	3-387-446-01	BRACKET (B)	
* 28	X-3366-458-1	BRACKET (F) ASSY	
* 29	X-3366-457-1	BRACKET (R) ASSY	
* 30	1-648-722-11	AT-5 BOARD	
31	3-704-197-23	SCREW (M1.4X2.5), LOCKING	
32	3-349-825-82	SCREW, PRECISION	
33	3-704-197-01	SCREW (M1.4X1.6), LOCKING	

5-2. CASSETTE HOLDER SECTION (MT-D8-47)

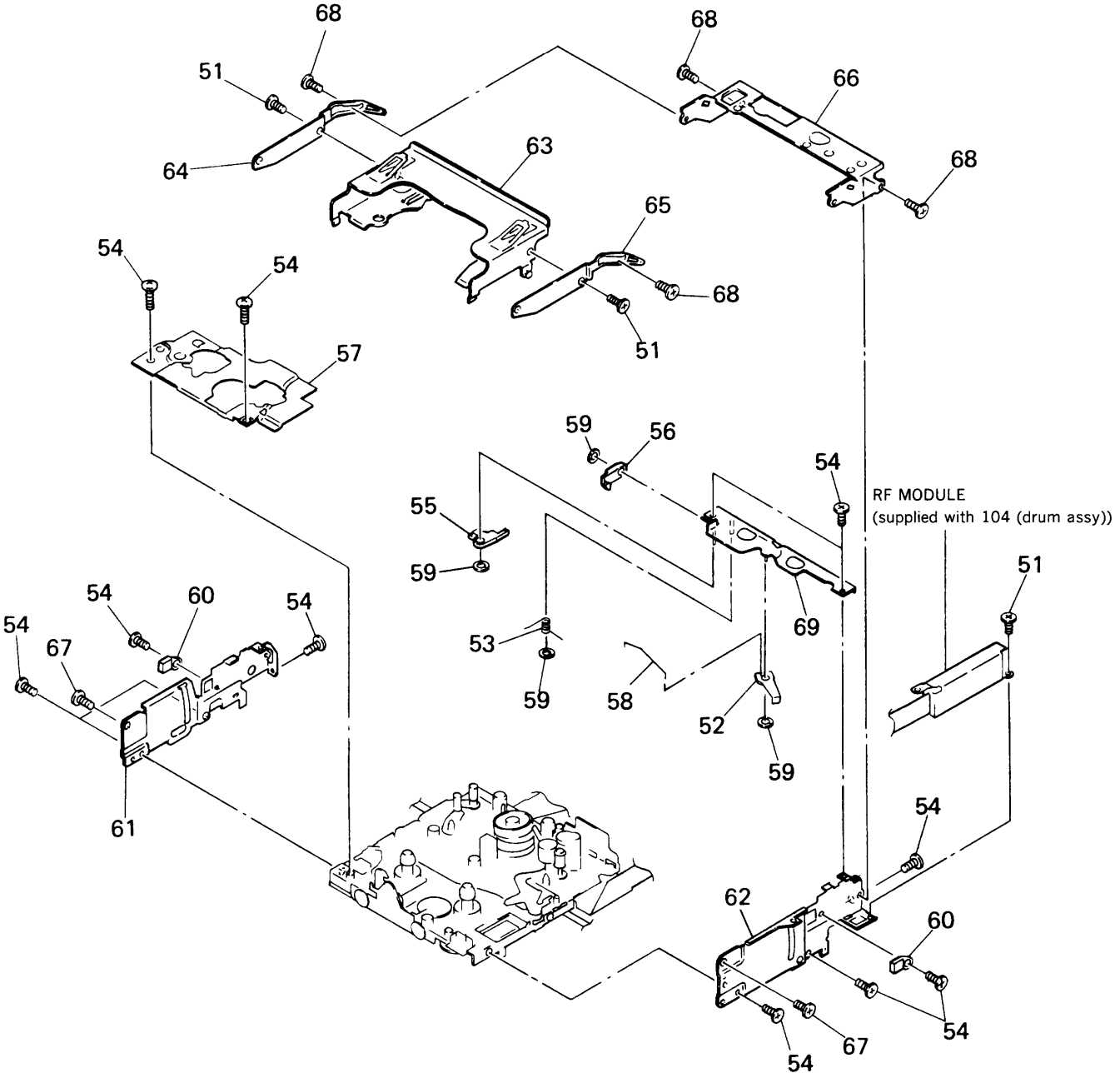

Ref. No.	Part No.	Description	Remark
51	3-349-825-01	SCREW	
52	3-387-569-01	WIPER	
53	3-363-266-01	SPRING, TORSION	
54	3-704-197-01	SCREW (M1.4X1.6), LOCKING	
55	3-363-261-01	LEVER (B)	
56	3-363-260-01	LEVER (A)	
* 57	3-387-574-01	COVER (MD)	
58	3-363-443-01	LINK	
59	3-315-384-11	WASHER, STOPPER (t=0.25)	
60	3-387-565-01	HOLDER (END SENSOR)	

Ref. No.	Part No.	Description	Remark
* 61	X-3366-479-2	BRACKET (L) ASSY	
62	3-387-573-01	BRACKET (R)	
63	X-3366-480-1	HOLDER (CASSETTE) ASSY	
64	3-387-571-01	LEVER (CASSETTE COMPARTMENT L)	
65	3-387-570-01	LEVER (CASSETTE COMPARTMENT R)	
66	3-387-572-01	HOLDER	
67	3-387-566-01	SCREW, STEP	
68	3-387-567-01	SCREW, STEP	
69	X-3366-478-1	COVER (TAPE PASS) ASSY	

5-3. MECHANISM DECK SECTION-1 (MT-D8-47)

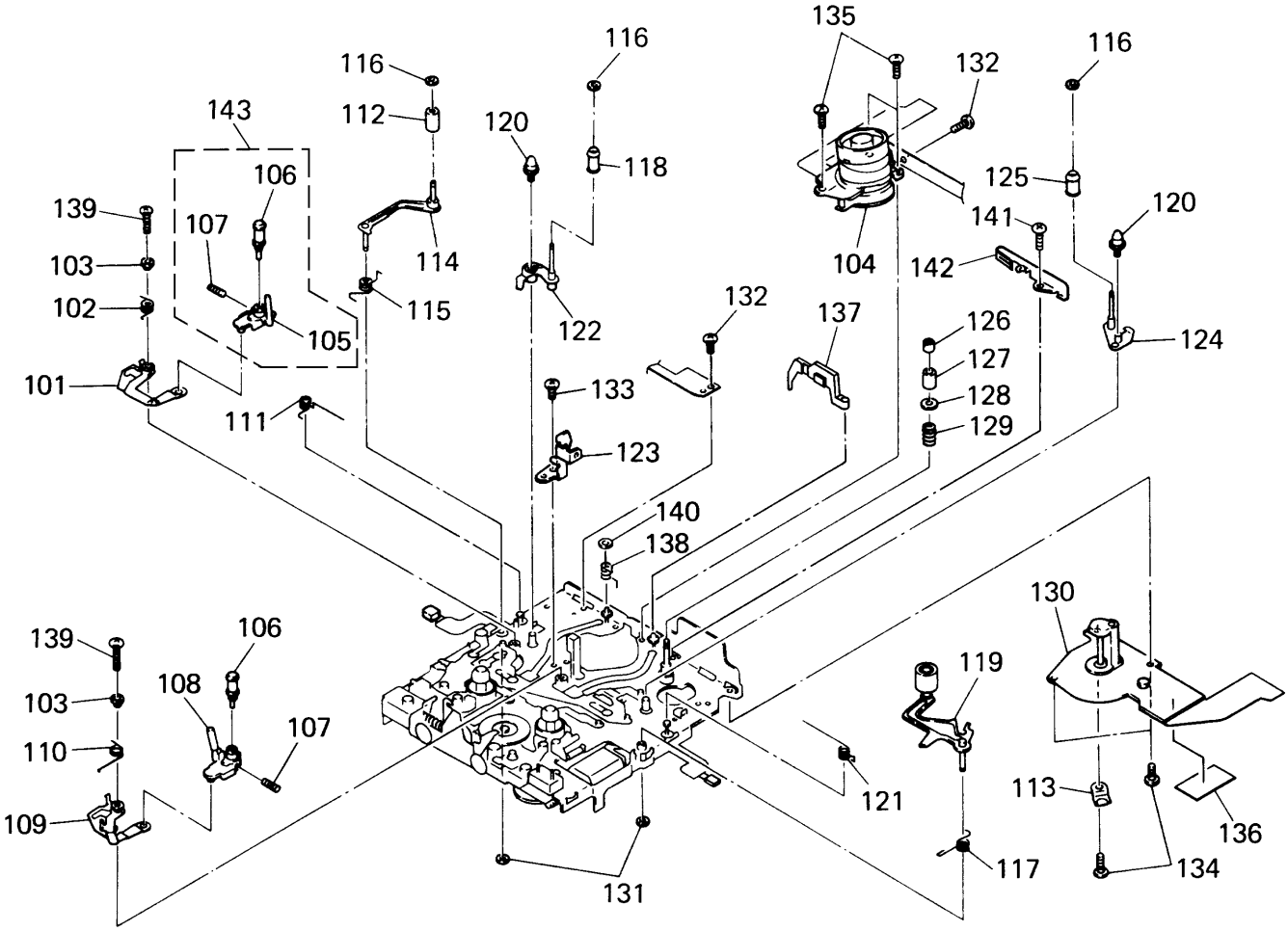

Ref. No.	Part No.	Description	Remark
101	X-3344-945-1	LEVER (LOADING. SA) ASSY	
102	3-360-897-01	SPRING, TORSION	
103	3-354-247-03	SHAFT (LOADING B)	
104	X-4943-984-1	DRUM ASSY (INCLUDING RF MODULE)	
105	X-3344-968-1	GUIDE BLOCK (S) ASSY, SLANT	
106	X-3344-963-1	GUIDE (DIA. 4) ASSY, ROLLER	
107	3-366-945-01	SET-SCREW, SLOT M1. 2X3	
108	X-3344-969-1	GUIDE BLOCK (T) ASSY, SLANT	
109	X-3344-943-1	LEVER (LOADING. TA) ASSY	
110	3-360-895-01	SPRING, TORSION	
111	3-361-106-01	SPRING, TORSION	
112	3-360-866-01	ROLLER (TENSION REGULATOR)	
113	3-363-224-01	REINFORCEMENT (CAPSTAN MOTOR)	
114	X-3366-481-1	LEVER (TENSION REGULATOR A) ASSY	
115	3-361-118-01	SPRING, TORSION	
116	3-315-414-01	WASHER	
117	3-361-115-01	SPRING, TORSION	
118	3-360-864-01	ROLLER (B), GUIDE	
119	X-3362-201-1	ARM ASSY, PINCH ROLLER	
120	3-360-817-01	SHAFT (CASSETTE)	
121	3-361-105-01	SPRING, TORSION	

Ref. No.	Part No.	Description	Remark
122	X-3366-482-1	LEVER (SF) ASSY	
* 123	3-388-542-02	REINFORCEMENT (LED)	
124	X-3366-483-1	LEVER (TF) ASSY	
125	3-360-863-01	ROLLER (A), GUIDE	
126	3-337-605-01	NUT, ADJUSTMENT	
127	3-366-697-21	GUIDE (GA), FIXED	
128	3-337-677-01	FLANGE	
129	3-573-470-00	SPRING, COMPRESSION	
130	8-835-495-01	MOTOR, DC SCR-0201A	
131	3-315-384-11	WASHER, STOPPER (t=0. 25)	
132	3-349-825-11	SCREW	
133	3-365-611-11	SCREW (M1. 4)	
134	3-704-197-01	SCREW (M1. 4X1. 6), LOCKING	
135	3-704-197-21	SCREW (M1. 4X2. 5), LOCKING	
136	4-017-441-01	CUSHION (B)	
137	X-4946-420-1	LEVER (HEAD CLEANER) ASSY	
138	4-979-601-01	SPRING, TORSION	
139	7-627-451-57	SCREW, PRECISION +K 1. 4X4	
140	3-366-249-01	WASHER	
141	3-349-825-01	SCREW	
* 142	4-977-327-01	PLATE, GROUND	
143	X-3362-278-9	GUIDE BLOCK (S) BLOCK ASSY, SLANT	

5-4. MECHANISM DECK SECTION-2 (MT-D8-47)

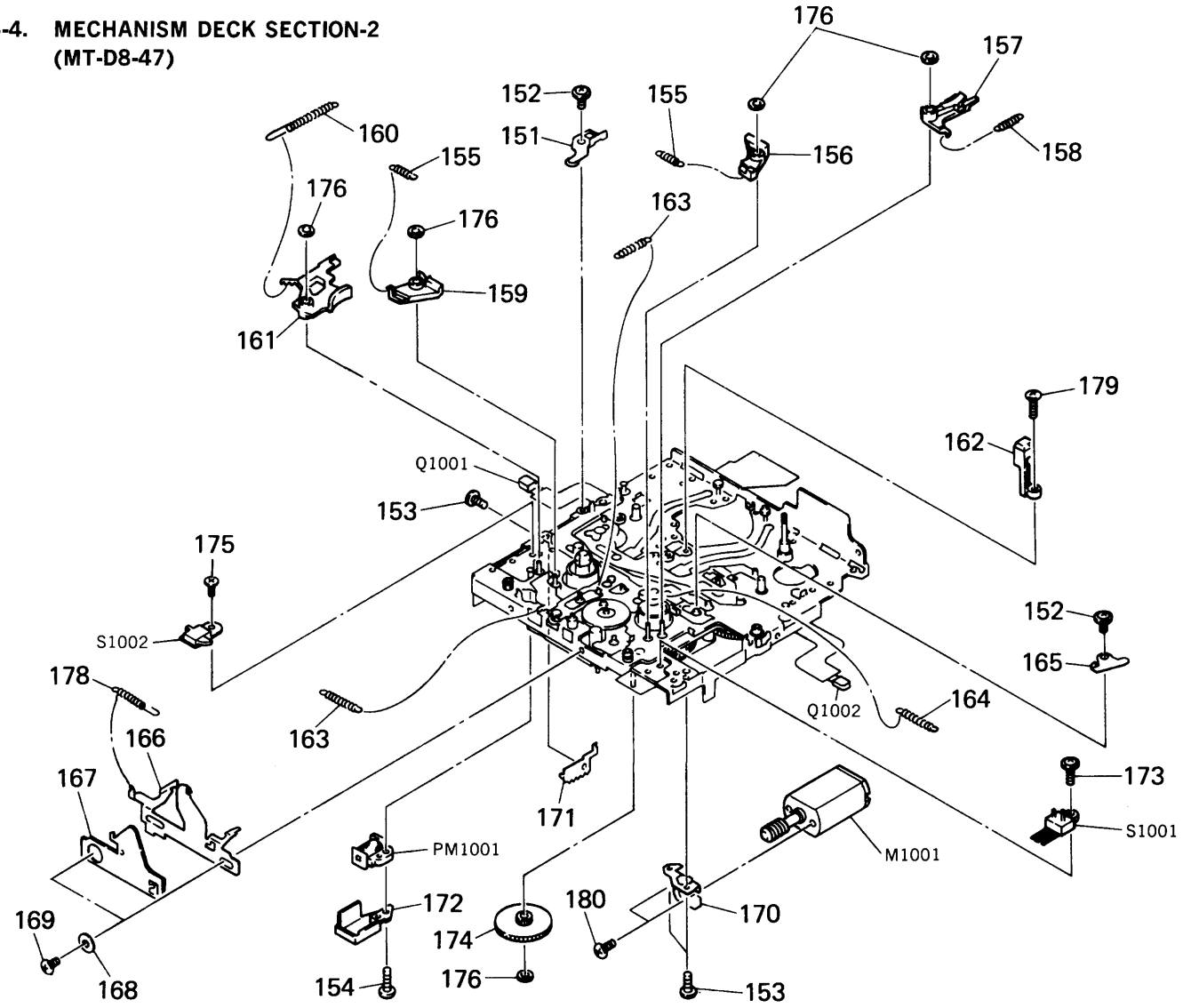

Ref. No.	Part No.	Description	Remark
151	X-3344-940-1	LEVER (TENSION REGULATOR B1) ASSY	
151	X-3362-179-1	LEVER (TENSION REGULATOR B2) ASSY	
* 151	X-3362-180-1	LEVER (TENSION REGULATOR B3) ASSY	
* 151	X-3362-181-1	LEVER (TENSION REGULATOR B4) ASSY	
152	3-703-502-91	SCREW	
153	3-365-611-11	SCREW (M1.4)	
154	3-703-502-31	SCREW	
155	3-361-113-01	SPRING, TENSION	
156	X-3344-947-1	LEVER (BRAKE T) ASSY	
157	X-3344-946-1	LEVER (BRAKE RBT) ASSY	
158	3-361-111-01	SPRING, TENSION (40g/cm)	
158	3-367-610-01	SPRING, TENSION (35g/cm)	
158	3-367-611-01	SPRING, TENSION (30g/cm)	
158	3-369-815-01	SPRING, TENSION (45g/cm)	
158	3-369-816-01	SPRING, TENSION (49g/cm)	
158	3-369-817-01	SPRING, TENSION (55g/cm)	
159	X-3344-948-1	LEVER (BRAKE S) ASSY	
160	3-361-112-01	SPRING, TENSION	
161	X-3344-949-1	LEVER (TENSION REGULATOR) ASSY	
162	3-360-872-01	BRACKET (LED)	
163	3-361-107-01	SPRING, TENSION	
164	3-361-110-11	SPRING, TENSION	

Ref. No.	Part No.	Description	Remark
165	X-3344-951-1	LEVER (R.BT RETURN A) ASSY	
* 165	X-3362-182-1	LEVER (R.BT RETERN B) ASSY	
165	X-4941-476-1	LEVER (R.BT RETURN C) ASSY	
166	3-387-575-03	LEVER (CASSETTE COMPARTMENT LOCK)	
167	3-387-577-01	LEVER (CASSETTE COMPARTMENT TRIGGER)	
168	3-387-568-01	SHAFT (LEVER, CASSETTE COMPARTMENT LOCK)	
169	3-704-246-01	SCREW (P1.4X1.6)	
170	3-387-562-01	BRACKET (MODE.MOTOR)	
171	3-360-869-01	BRACKET (BT, SPRING)	
172	3-360-882-01	COVER (SOLENOID)	
173	3-703-502-21	SCREW	
174	3-360-829-01	GEAR (MODE B)	
176	3-315-384-11	WASHER, STOPPER (t=0.25)	
178	4-959-408-01	SPRING (POWER TENSION), TENSION	
179	3-704-197-21	SCREW (M1.4X2.5), LOCKING	
180	7-627-551-47	SCREW, PRECISION +P 1.4X1.4	
M1001	1-698-104-11	MOTOR (WITH GEAR)	
PM1001	1-454-602-11	SOLENOID, PLUNGER	
Q1001	8-729-925-30	PHOTO TRANSISTOR PT4810FJ	
Q1002	8-729-925-30	PHOTO TRANSISTOR PT4810FJ	
S1001	1-571-878-11	SWITCH, PUSH (2 KEY) (CASSETTE DET/REC PROOF)	
S1002	1-572-288-11	SWITCH, PUSH (AC POWER) (1 KEY) (CASSETTE COMPARTMENT LOCK)	

5-5. MECHANISM DECK SECTION-3 (MT-D8-47)

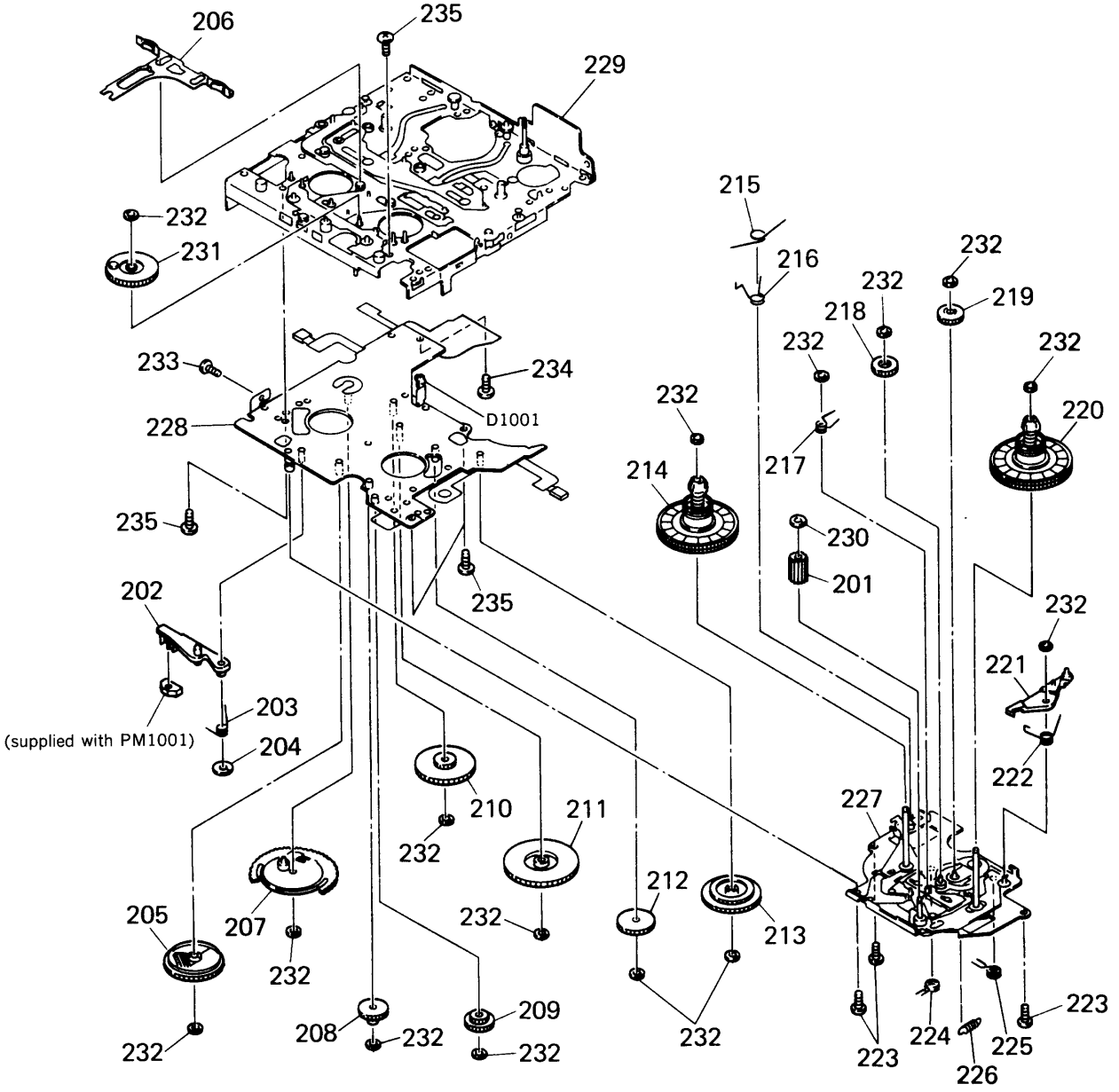

Ref. No.	Part No.	Description	Remark
201	3-360-831-02	GEAR (MODE E)	
202	X-3344-956-3	LEVER (SOLENOID) ASSY	
203	3-361-117-01	SPRING, TORSION	
204	3-311-815-11	WASHER, POLYETHYLENE	
205	X-3344-966-3	GEAR (A) ASSY, CAM	
206	X-3344-959-1	LEVER (SOFT BRAKE) ASSY	
207	X-4946-589-1	GEAR (LOADING) ASSY	
208	3-360-832-02	GEAR (MODE D)	
209	3-360-830-02	GEAR (MODE C)	
210	3-360-828-01	GEAR (E)	
211	3-360-883-02	GEAR (D)	
212	3-360-827-01	GEAR (C)	
213	3-360-824-01	GEAR (B)	
214	X-3344-960-4	TABLE (S) ASSY, REEL	
215	3-361-104-01	SPRING, TORSION	
216	3-361-116-03	SPRING, TORSION	
217	3-361-103-11	SPRING, TORSION	
218	3-360-826-02	GEAR (FF/REW)	

Ref. No.	Part No.	Description	Remark
219	3-360-825-01	GEAR (FR)	
220	X-3344-961-4	TABLE (T) ASSY, REEL	
221	3-360-849-02	LEVER (T LOCK)	
222	3-361-114-01	SPRING, TORSION	
223	3-703-502-01	SCREW	
224	3-361-102-01	SPRING, TORSION	
225	3-360-896-03	SPRING, TORSION	
226	3-370-921-02	SPRING, TENSION	
227	X-3366-477-1	CHASSIS (REEL) ASSY	
228	X-4944-047-1	CHASSIS (SUB) ASSY	
229	X-4946-432-1	CHASSIS (MAIN) ASSY	
230	3-321-813-01	WASHER, COTTER POLYETHYLENE	
231	3-360-886-03	GEAR (B), CAM	
232	3-315-384-11	WASHER, STOPPER (t=0.25)	
233	3-349-825-01	SCREW	
234	3-349-825-11	SCREW	
235	3-365-611-11	SCREW (M1.4)	
D1001	8-719-988-42	LED GL453S	

AT-5 MAIN

SECTION 6
ELECTRICAL PARTS LIST

NOTE:
- Due to standardization, replacements in the parts list may be different from the parts specified in the diagrams or the components used on the set.
- -XX and -X mean standardized parts, so they may have some difference from the original one.
- RESISTORS
  All resistors are in ohms.
  METAL:Metal-film resistor.
  METAL OXIDE: Metal oxide-film resistor.
  F:nonflammable
- Abbreviation
  JE : Tourist model
  G : German model
- Items marked "*" are not stocked since they are seldom required for routine service. Some delay should be anticipated when ordering these items.
- SEMICONDUCTORS
  In each case, u:μ, for example:
  uA..: μA.. uPA..: μPA..
  uPB..: μPB.. uPC..: μPC.. uPD..: μPD..
- CAPACITORS
  uF: μF
- COILS
  uH: μH

When indicating parts by reference number, please include the board.

The components identified by mark ⚠ or dotted line with mark. ⚠ are critical for safety. Replace only with part number specified.

Les composants identifiés par une marque ⚠ sont critiques pour la sécurité.
Ne les remplacer que par une pièce portant le numéro spécifié.

Ref. No.	Part No.	Description			Remark
*	1-648-722-11	AT-5 BOARD			
		**********			
		< CAPACITOR >			
C700	1-104-964-11	ELECT	470uF	20%	10V
**********					
	A-3276-893-A	MAIN BOARD, COMPLETE (INCLUDING TRANSFORMER BOARD)			
		**********			
	3-387-477-11	TERMINAL (MAIN), BATTERY			
	3-708-377-01	SLIDER, SURF LOCK (16P)			
		< CAPACITOR >			
C001	1-164-222-11	CERAMIC CHIP	0.22uF		25V
C002	1-164-222-11	CERAMIC CHIP	0.22uF		25V
C101	1-135-181-21	TANTALUM CHIP	4.7uF	20%	6.3V
C102	1-135-259-11	TANTAL. CHIP	10uF	20%	6.3V
C103	1-110-477-11	SOLID CHIP	6.8uF	20%	6.3V
C105	1-162-953-11	CERAMIC CHIP	100PF	5%	50V
C106	1-110-410-11	SOLID CHIP	10uF	20%	6.3V
C107	1-162-922-11	CERAMIC CHIP	39PF	5%	50V
C108	1-162-915-11	CERAMIC CHIP	10PF	0.5PF	50V
C109	1-135-210-11	TANTALUM CHIP	4.7uF	20%	10V
C110	1-135-180-21	TANTALUM CHIP	3.3uF	20%	6.3V
C113	1-164-161-11	CERAMIC CHIP	0.0022uF	10%	100V
C117	1-135-259-11	TANTAL. CHIP	10uF	20%	6.3V
C118	1-162-953-11	CERAMIC CHIP	100PF	5%	50V
C119	1-162-953-11	CERAMIC CHIP	100PF	5%	50V
C120	1-135-157-21	TANTALUM CHIP	10uF	20%	6.3V
C121	1-164-480-11	CERAMIC CHIP	0.01uF	10%	50V
C122	1-162-964-11	CERAMIC CHIP	0.001uF	10%	50V
C125	1-135-202-21	TANTAL. CHIP	22uF	20%	4V
C126	1-104-847-11	TANTAL. CHIP	22uF	20%	4V
C128	1-163-009-11	CERAMIC CHIP	0.001uF	10%	50V
C129	1-163-022-00	CERAMIC CHIP	0.012uF	10%	50V
C131	1-128-014-11	SOLID CHIP	10uF	20%	4V
C134	1-104-848-11	TANTAL. CHIP	100uF	20%	4V
C135	1-135-201-11	TANTALUM CHIP	10uF	20%	4V
C201	1-135-181-21	TANTALUM CHIP	4.7uF	20%	6.3V
C202	1-135-259-11	TANTAL. CHIP	10uF	20%	6.3V
C203	1-135-211-11	TANTAL. CHIP	6.8uF	20%	6.3V
C205	1-162-953-11	CERAMIC CHIP	100PF	5%	50V
C206	1-110-410-11	SOLID CHIP	10uF	20%	6.3V
C207	1-162-922-11	CERAMIC CHIP	39PF	5%	50V
C208	1-162-915-11	CERAMIC CHIP	10PF	0.5PF	50V
C209	1-135-210-11	TANTALUM CHIP	4.7uF	20%	10V
C210	1-135-180-21	TANTALUM CHIP	3.3uF	20%	6.3V
C213	1-164-161-11	CERAMIC CHIP	0.0022uF	10%	100V
C217	1-135-259-11	TANTAL. CHIP	10uF	20%	6.3V
C218	1-162-953-11	CERAMIC CHIP	100PF	5%	50V
C219	1-162-953-11	CERAMIC CHIP	100PF	5%	50V
C220	1-135-157-21	TANTALUM CHIP	10uF	20%	6.3V
C221	1-164-480-11	CERAMIC CHIP	0.01uF	10%	50V
C222	1-162-964-11	CERAMIC CHIP	0.001uF	10%	50V
C225	1-135-202-21	TANTAL. CHIP	22uF	20%	4V
C226	1-104-847-11	TANTAL. CHIP	22uF	20%	4V
C228	1-163-009-11	CERAMIC CHIP	0.001uF	10%	50V
C229	1-163-022-00	CERAMIC CHIP	0.012uF	10%	50V
C231	1-128-014-11	SOLID CHIP	10uF	20%	4V
C234	1-104-848-11	TANTAL. CHIP	100uF	20%	4V
C235	1-135-201-11	TANTALUM CHIP	10uF	20%	4V
C302	1-135-210-11	TANTALUM CHIP	4.7uF	20%	10V
C303	1-135-149-21	TANTALUM CHIP	2.2uF	20%	10V
C304	1-135-149-21	TANTALUM CHIP	2.2uF	20%	10V
C305	1-135-259-11	TANTAL. CHIP	10uF	20%	6.3V
C306	1-124-779-00	ELECT CHIP	10uF	20%	16V
C307	1-135-259-11	TANTAL. CHIP	10uF	20%	6.3V
C308	1-162-970-11	CERAMIC CHIP	0.01uF	10%	25V
C309	1-162-638-11	CERAMIC CHIP	1uF		16V
C310	1-124-778-00	ELECT CHIP	22uF	20%	6.3V
C311	1-162-970-11	CERAMIC CHIP	0.01uF	10%	25V
C312	1-135-259-11	TANTAL. CHIP	10uF	20%	6.3V
C313	1-162-970-11	CERAMIC CHIP	0.01uF	10%	25V
C314	1-162-953-11	CERAMIC CHIP	100PF	5%	50V
C318	1-124-779-00	ELECT CHIP	10uF	20%	16V
C319	1-126-395-11	ELECT	22uF	20%	16V
C322	1-124-778-00	ELECT CHIP	22uF	20%	6.3V
C323	1-164-156-11	CERAMIC CHIP	0.1uF		25V

Ref. No.	Part No.	Description			Remark
C324	1-124-778-00	ELECT CHIP	22uF	20%	6. 3V
C327	1-104-851-11	TANTAL. CHIP	10uF	20%	10V
C330	1-135-157-21	TANTALUM CHIP	10uF	20%	6. 3V
C331	1-164-156-11	CERAMIC CHIP	0. 1uF		25V
C332	1-162-970-11	CERAMIC CHIP	0. 01uF	10%	25V
C333	1-135-259-11	TANTAL. CHIP	10uF	20%	6. 3V
C334	1-135-259-11	TANTAL. CHIP	10uF	20%	6. 3V
C335-337					
	1-162-970-11	CERAMIC CHIP	0. 01uF	10%	25V
C338	1-135-210-11	TANTALUM CHIP	4. 7uF	20%	10V
C339	1-135-201-11	TANTALUM CHIP	10uF	20%	4V
C340	1-135-091-00	TANTAL. CHIP	1uF	20%	16V
C341	1-135-201-11	TANTALUM CHIP	10uF	20%	4V
C342	1-162-970-11	CERAMIC CHIP	0. 01uF	10%	25V
C343	1-104-847-11	TANTAL. CHIP	22uF	20%	4V
C346	1-162-970-11	CERAMIC CHIP	0. 01uF	10%	25V
C347	1-135-091-00	TANTAL. CHIP	1uF	20%	16V
C348	1-135-259-11	TANTAL. CHIP	10uF	20%	6. 3V
C349	1-104-847-11	TANTAL. CHIP	22uF	20%	4V
C361	1-135-091-00	TANTAL. CHIP	1uF	20%	16V
C362	1-162-970-11	CERAMIC CHIP	0. 01uF	10%	25V
C363	1-135-091-00	TANTAL. CHIP	1uF	20%	16V
C364	1-162-970-11	CERAMIC CHIP	0. 01uF	10%	25V
C365	1-104-851-11	TANTAL. CHIP	10uF	20%	10V
C366	1-162-970-11	CERAMIC CHIP	0. 01uF	10%	25V
C367	1-135-259-11	TANTAL. CHIP	10uF	20%	6. 3V
C368	1-162-970-11	CERAMIC CHIP	0. 01uF	10%	25V
C369	1-104-847-11	TANTAL. CHIP	22uF	20%	4V
C370	1-135-157-21	TANTALUM CHIP	10uF	20%	6. 3V
C371	1-135-201-11	TANTALUM CHIP	10uF	20%	4V
C372	1-162-970-11	CERAMIC CHIP	0. 01uF	10%	25V
C373	1-135-259-11	TANTAL. CHIP	10uF	20%	6. 3V
C375	1-135-157-21	TANTALUM CHIP	10uF	20%	6. 3V
C377	1-135-201-11	TANTALUM CHIP	10uF	20%	4V
C380	1-164-156-11	CERAMIC CHIP	0. 1uF		25V
C501	1-164-156-11	CERAMIC CHIP	0. 1uF		25V
C502	1-162-970-11	CERAMIC CHIP	0. 01uF	10%	25V
C503	1-164-156-11	CERAMIC CHIP	0. 1uF		25V
C504	1-164-156-11	CERAMIC CHIP	0. 1uF		25V
C505	1-104-851-11	TANTAL. CHIP	10uF	20%	10V
C506	1-135-091-00	TANTAL. CHIP	1uF	20%	16V
C507	1-162-962-11	CERAMIC CHIP	470PF	10%	50V
C508	1-135-091-00	TANTAL. CHIP	1uF	20%	16V
C509	1-162-962-11	CERAMIC CHIP	470PF	10%	50V
C510	1-164-004-11	CERAMIC CHIP	0. 1uF	10%	25V
C511	1-164-156-11	CERAMIC CHIP	0. 1uF		25V
C513	1-164-004-11	CERAMIC CHIP	0. 1uF	10%	25V
C514	1-162-967-11	CERAMIC CHIP	0. 0033uF	10%	50V
C517	1-162-970-11	CERAMIC CHIP	0. 01uF	10%	25V

Ref. No.	Part No.	Description			Remark
C518	1-162-964-11	CERAMIC CHIP	0. 001uF	10%	50V
C519	1-164-156-11	CERAMIC CHIP	0. 1uF		25V
C521-523					
	1-162-964-11	CERAMIC CHIP	0. 001uF	10%	50V
C524	1-162-927-11	CERAMIC CHIP	100PF	5%	50V
C525	1-104-852-11	TANTAL. CHIP	22uF	20%	6. 3V
C526	1-135-259-11	TANTAL. CHIP	10uF	20%	6. 3V
C528	1-162-960-11	CERAMIC CHIP	220PF	10%	50V
C529	1-162-960-11	CERAMIC CHIP	220PF	10%	50V
C530	1-164-156-11	CERAMIC CHIP	0. 1uF		25V
C532	1-162-966-11	CERAMIC CHIP	0. 0022uF	10%	50V
C533	1-135-091-00	TANTAL. CHIP	1uF	20%	16V
C534	1-162-964-11	CERAMIC CHIP	0. 001uF	10%	50V
C535	1-162-964-11	CERAMIC CHIP	0. 001uF	10%	50V
C536	1-164-156-11	CERAMIC CHIP	0. 1uF		25V
C537	1-135-091-00	TANTAL. CHIP	1uF	20%	16V
C538	1-164-234-11	CERAMIC CHIP	1uF		10V
C539	1-164-234-11	CERAMIC CHIP	1uF		10V
C540	1-104-852-11	TANTAL. CHIP	22uF	20%	10V
C541	1-104-851-11	TANTAL. CHIP	10uF	20%	10V
C542	1-162-970-11	CERAMIC CHIP	0. 01uF	10%	25V
C543	1-164-234-11	CERAMIC CHIP	1uF		10V
C544	1-135-091-00	TANTAL. CHIP	1uF	20%	16V
C545	1-135-259-11	TANTAL. CHIP	10uF	20%	6. 3V
C546	1-135-259-11	TANTAL. CHIP	10uF	20%	6. 3V
C547	1-164-156-11	CERAMIC CHIP	0. 1uF		25V
C549-552					
	1-127-558-11	ELECT(SOLID)	10uF	20%	10V
C553	1-104-852-11	TANTAL. CHIP	22uF	20%	10V
C554	1-127-558-11	ELECT(SOLID)	10uF	20%	10V
C557-559					
	1-164-227-11	CERAMIC CHIP	0. 022uF	10%	25V
C560	1-164-156-11	CERAMIC CHIP	0. 1uF		25V
C561	1-162-970-11	CERAMIC CHIP	0. 01uF	10%	25V
C562	1-163-038-00	CERAMIC CHIP	0. 1uF		25V
C563	1-162-964-11	CERAMIC CHIP	0. 001uF	10%	50V
C564	1-162-953-11	CERAMIC CHIP	100PF	5%	50V
C565	1-107-685-11	TANTAL. CHIP	15uF	20%	6. 3V
C566	1-164-156-11	CERAMIC CHIP	0. 1uF		25V
C567	1-164-156-11	CERAMIC CHIP	0. 1uF		25V
C568	1-164-227-11	CERAMIC CHIP	0. 022uF	10%	25V
C569-571					
	1-164-156-11	CERAMIC CHIP	0. 1uF		25V
C572	1-135-259-11	TANTAL. CHIP	10uF	20%	6. 3V
C573	1-164-156-11	CERAMIC CHIP	0. 1uF		25V
C574	1-162-917-11	CERAMIC CHIP	15PF	5%	50V
C575	1-162-917-11	CERAMIC CHIP	15PF	5%	50V
C576	1-104-852-11	TANTAL. CHIP	22uF	20%	10V
C577	1-135-148-21	TANTAL. CHIP	1. 5uF	20%	10V

MAIN

Ref. No.	Part No.	Description			Remark
C578	1-162-967-11	CERAMIC CHIP	0.0033uF	10%	50V
C579	1-104-852-11	TANTAL. CHIP	22uF	20%	6.3V
C580	1-162-967-11	CERAMIC CHIP	0.0033uF	10%	50V
C581	1-162-970-11	CERAMIC CHIP	0.01uF	10%	25V
C582	1-162-970-11	CERAMIC CHIP	0.01uF	10%	25V
C583	1-135-259-11	TANTAL. CHIP	10uF	20%	6.3V
C584	1-164-156-11	CERAMIC CHIP	0.1uF		25V
C586	1-164-156-11	CERAMIC CHIP	0.1uF		25V
C587	1-162-970-11	CERAMIC CHIP	0.01uF	10%	25V
C588	1-104-755-11	ELECT	68uF	20%	6.3V
C591	1-162-917-11	CERAMIC CHIP	15PF	5%	50V
C592	1-162-910-11	CERAMIC CHIP	5PF	0.25PF	50V
C593	1-162-910-11	CERAMIC CHIP	5PF	0.25PF	50V
C594	1-162-917-11	CERAMIC CHIP	15PF	5%	50V
C595	1-162-915-11	CERAMIC CHIP	10PF	0.5PF	50V
C596	1-162-915-11	CERAMIC CHIP	10PF	0.5PF	50V
C597	1-104-851-11	TANTAL. CHIP	10uF	20%	10V
C598	1-162-970-11	CERAMIC CHIP	0.01uF	10%	25V
C599	1-135-259-11	TANTAL. CHIP	10uF	20%	6.3V
C600	1-162-970-11	CERAMIC CHIP	0.01uF	10%	25V
C601	1-164-156-11	CERAMIC CHIP	0.1uF		25V
C602	1-164-156-11	CERAMIC CHIP	0.1uF		25V
C605	1-104-851-11	TANTAL. CHIP	10uF	20%	10V
C606	1-164-156-11	CERAMIC CHIP	0.1uF		25V
C608	1-162-970-11	CERAMIC CHIP	0.01uF	10%	25V
C609	1-164-234-11	CERAMIC CHIP	1uF		10V
C610	1-164-156-11	CERAMIC CHIP	0.1uF		25V
C611	1-164-156-11	CERAMIC CHIP	0.1uF		25V
C613	1-162-966-11	CERAMIC CHIP	0.0022uF	10%	50V
C614	1-162-966-11	CERAMIC CHIP	0.0022uF	10%	50V
C615	1-164-234-11	CERAMIC CHIP	1uF		10V
C616	1-164-156-11	CERAMIC CHIP	0.1uF		25V
C617	1-162-964-11	CERAMIC CHIP	0.001uF	10%	50V
C618	1-162-923-11	CERAMIC CHIP	47PF	5%	50V
C620	1-162-966-11	CERAMIC CHIP	0.0022uF	10%	50V
C621	1-162-979-11	CERAMIC CHIP	0.0027uF	10%	50V
C622	1-162-953-11	CERAMIC CHIP	100PF	5%	50V
C624	1-162-970-11	CERAMIC CHIP	0.01uF	10%	25V
C627	1-164-234-11	CERAMIC CHIP	1uF		10V
C1000	1-104-852-11	TANTAL. CHIP	22uF	20%	6.3V
C1002	1-162-638-11	CERAMIC CHIP	1uF		16V
C2001	1-162-964-11	CERAMIC CHIP	0.001uF	10%	50V
C2002	1-164-234-11	CERAMIC CHIP	1uF		10V
C2004	1-164-234-11	CERAMIC CHIP	1uF		10V
C2005	1-135-179-21	TANTAL. CHIP	2.2uF	20%	16V
C2008	1-164-234-11	CERAMIC CHIP	1uF		10V
C2009	1-162-968-11	CERAMIC CHIP	0.0047uF	10%	50V
C3001	1-135-148-21	TANTAL. CHIP	1.5uF	20%	10V
C3002	1-104-851-11	TANTAL. CHIP	10uF	20%	10V

Ref. No.	Part No.	Description	Remark
		< CONNECTOR >	
* CN501	1-750-374-11	CONNECTOR, FPC 14P	
* CN502	1-691-419-11	HOUSING, CONNECTOR 8P	
CN504	1-569-530-11	HOUSING, CONNECTOR 16P	
* CN505	1-691-798-11	HOUSING, CONNECTOR 22P	
* CN507	1-750-375-11	CONNECTOR, FPC 22P	
CN508	1-750-377-11	SOCKET, CONNECTOR 7P (REMOTE DIGITAL I/O)	
* CN509	1-750-373-11	CONNECTOR, FPC 8P	
		< DC-DC CONVERTER >	
CP501	1-467-045-11	CONVERTER UNIT, DC-DC	
		< DIODE >	
D102	8-719-033-14	LED CL-170PG-CD-T	
D103	8-719-033-14	LED CL-170PG-CD-T	
D104	8-719-033-14	LED CL-170PG-CD-T	
D202	8-719-033-14	LED CL-170PG-CD-T	
D203	8-719-033-14	LED CL-170PG-CD-T	
D204	8-719-033-14	LED CL-170PG-CD-T	
D301	8-719-105-58	DIODE RD3.9M-B2	
D303	8-719-975-43	DIODE RB420D	
D331	8-719-975-43	DIODE RB420D	
D332	8-719-975-43	DIODE RB420D	
D340	8-719-975-43	DIODE RB420D	
D341	8-719-975-43	DIODE RB420D	
D501	8-719-980-38	DIODE SB07-03C	
D502	8-719-980-38	DIODE SB07-03C	
D503	8-719-980-38	DIODE SB07-03C	
D505	8-719-404-16	DIODE MA713	
D506	8-719-800-76	DIODE 1SS226	
D507	8-719-800-76	DIODE 1SS226	
D508	8-719-800-76	DIODE 1SS226	
D509	8-719-800-76	DIODE 1SS226	
D510	8-719-026-26	DIODE MA786WK	
D511	8-719-105-91	DIODE RD5.6M-B2	
D512	8-719-404-35	DIODE MA141WK	
D515	8-719-820-05	DIODE 1SS181	
D516	8-719-820-05	DIODE 1SS181	
D517	8-719-989-73	DIODE SB007T03C	
D518	8-719-404-35	DIODE MA141WK	
D520	8-719-404-16	DIODE MA713	
		< IC >	
IC301	8-759-970-66	IC LM833M-FL63	
IC302	8-759-161-76	IC TK15021MTL	
IC303	8-759-097-92	IC NJM2100V	
IC304	8-759-161-74	IC AK5344-VS-E1	
IC305	8-759-501-41	IC SM5840BS	

Ref. No.	Part No.	Description	Remark
IC308	8-759-058-41	IC NJM3416V	
IC311	8-759-178-39	IC PCM69AU-J-T1	
IC313	8-759-097-92	IC NJM2100V	
IC314	8-759-161-75	IC NJM2112V(TE2)	
IC315	8-759-168-90	IC TK11245TL	
IC501	8-759-094-01	IC MB3796PF-EF	
IC502	8-759-094-02	IC CXA8022N	
IC503	8-759-164-58	IC MCD002BM-TLM	
IC504	8-759-159-76	IC MM1138XQ	
IC505	8-759-168-66	IC RH5RE404AA-T1	
IC506	8-752-845-67	IC CXP80524-098R	
IC507	8-759-159-77	IC TK10502MT1	
IC508	8-752-352-24	IC CXD2605R	
IC509	8-759-031-58	IC SC7SU04F	
IC510	8-752-343-47	IC CXK58257ATM-12LB	
IC511	8-759-031-58	IC SC7SU04F	
IC2001	8-759-178-44	IC RN5VL33AA-TL	
		< JACK >	
J301	1-750-369-21	JACK (MIC)	
J302	1-750-370-21	JACK (LINE IN)	
J304	1-750-372-21	JACK (PHONES/LINE OUT)	
J501	1-750-368-11	JACK, DC (POLARITY UNIFIED TYPE)	(DC IN 6V)
		< COIL >	
L101	1-216-295-11	CONDUCTOR, CHIP	(2012)
L102	1-216-295-11	CONDUCTOR, CHIP	(2012)
L103	1-410-997-31	INDUCTOR CHIP 2.2uH	
L201	1-216-295-11	CONDUCTOR, CHIP	(2012)
L202	1-216-295-11	CONDUCTOR, CHIP	(2012)
L203	1-410-997-31	INDUCTOR CHIP 2.2uH	
L301	1-412-006-31	INDUCTOR CHIP 10uH	
L305	1-410-999-11	INDUCTOR CHIP 3.3uH	
L307	1-410-997-31	INDUCTOR CHIP 2.2uH	
L391	1-410-997-31	INDUCTOR CHIP 2.2uH	
L501	1-410-997-31	INDUCTOR CHIP 2.2uH	
L502	1-412-002-31	INDUCTOR CHIP 4.7uH	
L503	1-412-002-31	INDUCTOR CHIP 4.7uH	
L504	1-410-997-31	INDUCTOR CHIP 2.2uH	
L505	1-424-213-11	INDUCTOR 100uH	
L506	1-414-214-11	INDUCTOR 200uH	
L507	1-412-006-31	INDUCTOR CHIP 10uH	
L508	1-412-006-31	INDUCTOR CHIP 10uH	
L509	1-410-997-31	INDUCTOR CHIP 2.2uH	
L510	1-410-196-11	INDUCTOR CHIP 2.2uH	
L511	1-216-295-11	CONDUCTOR, CHIP	(2012)
L512	1-410-997-31	INDUCTOR CHIP 2.2uH	
L1001	1-410-997-31	INDUCTOR CHIP 2.2uH	

Ref. No.	Part No.	Description	Remark
		< TRANSISTOR >	
Q102	8-729-400-55	TRANSISTOR 2SD1328-S	
Q106	8-729-402-32	TRANSISTOR 2SD1819A-R	
Q202	8-729-400-55	TRANSISTOR 2SD1328-S	
Q206	8-729-402-32	TRANSISTOR 2SD1819A-R	
Q301	8-729-141-48	TRANSISTOR 2SB624-BV345	
Q302	8-729-216-22	TRANSISTOR 2SA1162-G	
Q303	8-729-402-19	TRANSISTOR XN6501	
Q304	8-729-402-93	TRANSISTOR UN5214-TX	
Q305	8-729-230-49	TRANSISTOR 2SC2712-YG	
Q306	8-729-159-65	TRANSISTOR 2SD596-DV5	
Q307	8-729-900-52	TRANSISTOR DTC114YK	
Q308	8-729-425-18	TRANSISTOR XN4504	
Q309	8-729-402-93	TRANSISTOR UN5214-TX	
Q311	8-729-402-32	TRANSISTOR 2SD1819A-R	
Q312	8-729-216-22	TRANSISTOR 2SA1162-G	
Q313	8-729-230-49	TRANSISTOR 2SC2712-YG	
Q314	8-729-402-19	TRANSISTOR XN6501	
Q316	8-729-402-93	TRANSISTOR UN5214-TX	
Q317	8-729-427-83	TRANSISTOR XP6501	
Q318	8-729-427-83	TRANSISTOR XP6501	
Q331	8-729-402-32	TRANSISTOR 2SD1819A-R	
Q332	8-729-216-22	TRANSISTOR 2SA1162-G	
Q333	8-729-402-32	TRANSISTOR 2SD1819A-R	
Q334	8-729-402-55	TRANSISTOR 2SB1218A-R-TX	
Q353	8-729-402-55	TRANSISTOR 2SB1218A-R-TX	
Q354	8-729-402-32	TRANSISTOR 2SD1819A-R	
Q355	8-729-402-93	TRANSISTOR UN5214-TX	
Q356	8-729-402-93	TRANSISTOR UN5214-TX	
Q357	8-729-402-93	TRANSISTOR UN5214-TX	
Q361	8-729-216-22	TRANSISTOR 2SA1162-G	
Q362	8-729-402-19	TRANSISTOR XN6501	
Q363	8-729-216-22	TRANSISTOR 2SA1162-G	
Q364	8-729-402-19	TRANSISTOR XN6501	
Q365	8-729-402-32	TRANSISTOR 2SD1819A-R	
Q366	8-729-402-32	TRANSISTOR 2SD1819A-R	
Q367	8-729-427-83	TRANSISTOR XP6501	
Q368	8-729-425-46	TRANSISTOR XP4315-TXE	
Q501	8-729-805-25	TRANSISTOR 2SB1121	
Q502	8-729-805-25	TRANSISTOR 2SB1121	
Q503	8-729-422-18	TRANSISTOR XN4315	
Q504	8-729-216-22	TRANSISTOR 2SA1162-G	
Q505	8-729-015-76	TRANSISTOR UN5211	
Q508	8-729-230-49	TRANSISTOR 2SC2712-YG	
Q509	8-729-230-49	TRANSISTOR 2SC2712-YG	
Q512	8-729-015-74	TRANSISTOR UN5111	
Q514	8-729-140-75	TRANSISTOR 2SD999-CLCK	
Q515	8-729-820-86	TRANSISTOR 2SB1121-ST	

MAIN

Ref. No.	Part No.	Description				Remark
Q516	8-729-402-45	TRANSISTOR	UN5212			
Q517	8-729-402-96	TRANSISTOR	UN5114			
Q518	8-729-924-62	TRANSISTOR	DTC113ZU			
Q519	8-729-216-22	TRANSISTOR	2SA1162-G			
Q2001	8-729-402-45	TRANSISTOR	UN5212			
Q3001	8-729-420-50	TRANSISTOR	UN5215			
		< RESISTOR >				
R101	1-216-830-11	METAL CHIP	5.6K	5%	1/16W	
R102	1-216-864-11	METAL CHIP	0	5%	1/16W	
R103	1-218-740-11	METAL CHIP	100K	0.50%	1/16W	
R104	1-218-716-11	METAL CHIP	10K	0.50%	1/16W	
R105	1-218-692-11	METAL CHIP	1K	0.50%	1/16W	
R106	1-216-830-11	METAL CHIP	5.6K	5%	1/16W	
R108	1-218-724-11	METAL CHIP	22K	0.50%	1/16W	
R109	1-216-809-11	METAL CHIP	100	5%	1/16W	
R110	1-218-873-11	METAL CHIP	12K	0.50%	1/16W	
R111	1-216-821-11	METAL CHIP	1K	5%	1/16W	
R113	1-218-736-11	METAL CHIP	68K	0.50%	1/16W	
R115	1-218-716-11	METAL CHIP	10K	0.50%	1/16W	
R116	1-218-716-11	METAL CHIP	10K	0.50%	1/16W	
R120	1-218-694-11	METAL CHIP	1.2K	0.50%	1/16W	
R121	1-216-864-11	METAL CHIP	0	5%	1/16W	
R122	1-218-672-11	METAL CHIP	150	0.50%	1/16W	
R123	1-218-672-11	METAL CHIP	150	0.50%	1/16W	
R127	1-218-730-11	METAL CHIP	39K	0.50%	1/16W	
R129	1-218-724-11	METAL CHIP	22K	0.50%	1/16W	
R130	1-216-809-11	METAL CHIP	100	5%	1/16W	
R132	1-216-802-11	METAL GLAZE	27	5%	1/16W	
R133	1-216-848-11	METAL CHIP	180K	5%	1/16W	
R136	1-216-817-11	METAL CHIP	470	5%	1/16W	
R137	1-218-710-11	METAL CHIP	5.6K	0.50%	1/16W	
R138	1-218-716-11	METAL CHIP	10K	0.50%	1/16W	
R140	1-216-864-11	METAL CHIP	0	5%	1/16W	
R151	1-218-670-11	METAL CHIP	120	0.50%	1/16W	
R152	1-218-692-11	METAL CHIP	1K	0.50%	1/16W	
R153	1-218-844-11	METAL CHIP	750	0.50%	1/16W	
R155	1-218-695-11	METAL CHIP	1.3K	0.50%	1/16W	
R156	1-211-983-11	METAL CHIP	39	0.50%	1/16W	
R157	1-216-841-11	METAL CHIP	47K	5%	1/16W	
R158	1-218-692-11	METAL CHIP	1K	0.50%	1/16W	
R159	1-218-692-11	METAL CHIP	1K	0.50%	1/16W	
R160	1-218-700-11	METAL CHIP	2.2K	0.50%	1/16W	
R162	1-218-716-11	METAL CHIP	10K	0.50%	1/16W	
R164	1-218-692-11	METAL CHIP	1K	0.50%	1/16W	
R173	1-216-845-11	METAL CHIP	100K	5%	1/16W	
R174	1-216-837-11	METAL CHIP	22K	5%	1/16W	
R177	1-216-833-11	METAL CHIP	10K	5%	1/16W	

Ref. No.	Part No.	Description				Remark
R178	1-218-732-11	METAL CHIP	47K	0.50%	1/16W	
R179	1-218-732-11	METAL CHIP	47K	0.50%	1/16W	
R180	1-216-809-11	METAL CHIP	100	5%	1/16W	
R181	1-216-833-11	METAL CHIP	10K	5%	1/16W	
R201	1-216-830-11	METAL CHIP	5.6K	5%	1/16W	
R202	1-216-864-11	METAL CHIP	0	5%	1/16W	
R203	1-218-740-11	METAL CHIP	100K	0.50%	1/16W	
R204	1-218-716-11	METAL CHIP	10K	0.50%	1/16W	
R205	1-218-692-11	METAL CHIP	1K	0.50%	1/16W	
R206	1-216-830-11	METAL CHIP	5.6K	5%	1/16W	
R208	1-218-724-11	METAL CHIP	22K	0.50%	1/16W	
R209	1-216-809-11	METAL CHIP	100	5%	1/16W	
R210	1-218-873-11	METAL CHIP	12K	0.50%	1/16W	
R211	1-216-821-11	METAL CHIP	1K	5%	1/16W	
R213	1-218-736-11	METAL CHIP	68K	0.50%	1/16W	
R215	1-218-716-11	METAL CHIP	10K	0.50%	1/16W	
R216	1-218-716-11	METAL CHIP	10K	0.50%	1/16W	
R220	1-218-694-11	METAL CHIP	1.2K	0.50%	1/16W	
R221	1-216-864-11	METAL CHIP	0	5%	1/16W	
R222	1-218-672-11	METAL CHIP	150	0.50%	1/16W	
R223	1-218-672-11	METAL CHIP	150	0.50%	1/16W	
R227	1-218-730-11	METAL CHIP	39K	0.50%	1/16W	
R229	1-218-724-11	METAL CHIP	22K	0.50%	1/16W	
R230	1-216-809-11	METAL CHIP	100	5%	1/16W	
R232	1-216-802-11	METAL GLAZE	27	5%	1/16W	
R233	1-216-848-11	METAL CHIP	180K	5%	1/16W	
R236	1-216-817-11	METAL CHIP	470	5%	1/16W	
R237	1-218-710-11	METAL CHIP	5.6K	0.50%	1/16W	
R238	1-218-716-11	METAL CHIP	10K	0.50%	1/16W	
R240	1-216-864-11	METAL CHIP	0	5%	1/16W	
R251	1-218-670-11	METAL CHIP	120	0.50%	1/16W	
R252	1-218-692-11	METAL CHIP	1K	0.50%	1/16W	
R253	1-218-844-11	METAL CHIP	750	0.50%	1/16W	
R255	1-218-695-11	METAL CHIP	1.3K	0.50%	1/16W	
R256	1-211-983-11	METAL CHIP	39	0.50%	1/16W	
R257	1-216-841-11	METAL CHIP	47K	5%	1/16W	
R258	1-218-692-11	METAL CHIP	1K	0.50%	1/16W	
R259	1-218-692-11	METAL CHIP	1K	0.50%	1/16W	
R260	1-218-700-11	METAL CHIP	2.2K	0.50%	1/16W	
R262	1-218-716-11	METAL CHIP	10K	0.50%	1/16W	
R264	1-218-692-11	METAL CHIP	1K	0.50%	1/16W	
R273	1-216-845-11	METAL CHIP	100K	5%	1/16W	
R274	1-216-837-11	METAL CHIP	22K	5%	1/16W	
R277	1-216-833-11	METAL CHIP	10K	5%	1/16W	
R278	1-218-732-11	METAL CHIP	47K	0.50%	1/16W	
R279	1-218-732-11	METAL CHIP	47K	0.50%	1/16W	
R280	1-216-809-11	METAL CHIP	100	5%	1/16W	
R281	1-216-833-11	METAL CHIP	10K	5%	1/16W	
R301	1-216-815-11	METAL CHIP	330	5%	1/16W	

Ref. No.	Part No.	Description			Remark
R304	1-216-841-11	METAL CHIP	47K	5%	1/16W
R305	1-216-845-11	METAL CHIP	100K	5%	1/16W
R306	1-216-853-11	METAL CHIP	470K	5%	1/16W
R307	1-216-821-11	METAL CHIP	1K	5%	1/16W
R308	1-216-821-11	METAL CHIP	1K	5%	1/16W
R309	1-218-732-11	METAL CHIP	47K	0.50%	1/16W
R310	1-218-732-11	METAL CHIP	47K	0.50%	1/16W
R312	1-216-834-11	METAL CHIP	12K	5%	1/16W
R313	1-216-825-11	METAL CHIP	2.2K	5%	1/16W
R314	1-216-833-11	METAL CHIP	10K	5%	1/16W
R315	1-216-825-11	METAL CHIP	2.2K	5%	1/16W
R316	1-216-825-11	METAL CHIP	2.2K	5%	1/16W
R317	1-216-851-11	METAL CHIP	330K	5%	1/16W
R318	1-216-825-11	METAL CHIP	2.2K	5%	1/16W
R319	1-216-825-11	METAL CHIP	2.2K	5%	1/16W
R320	1-216-821-11	METAL CHIP	1K	5%	1/16W
R321	1-216-833-11	METAL CHIP	10K	5%	1/16W
R322	1-216-833-11	METAL CHIP	10K	5%	1/16W
R323	1-216-864-11	METAL CHIP	0	5%	1/16W
R330	1-218-732-11	METAL CHIP	47K	0.50%	1/16W
R331	1-218-732-11	METAL CHIP	47K	0.50%	1/16W
R332	1-216-827-11	METAL CHIP	3.3K	5%	1/16W
R334	1-216-833-11	METAL CHIP	10K	5%	1/16W
R336	1-216-821-11	METAL CHIP	1K	5%	1/16W
R337	1-216-001-00	METAL CHIP	10	5%	1/10W
R338	1-216-864-11	METAL CHIP	0	5%	1/16W
R342	1-216-834-11	METAL CHIP	12K	5%	1/16W
R343	1-216-848-11	METAL CHIP	180K	5%	1/16W
R344	1-216-821-11	METAL CHIP	1K	5%	1/16W
R351	1-216-833-11	METAL CHIP	10K	5%	1/16W
R352	1-216-854-11	METAL CHIP	560K	5%	1/16W
R353	1-216-863-11	METAL GLAZE	3.3M	5%	1/16W
R355	1-216-854-11	METAL CHIP	560K	5%	1/16W
R356	1-216-821-11	METAL CHIP	1K	5%	1/16W
R358	1-216-833-11	METAL CHIP	10K	5%	1/16W
R359	1-216-857-11	METAL CHIP	1M	5%	1/16W
R360	1-216-821-11	METAL CHIP	1K	5%	1/16W
R361	1-216-833-11	METAL CHIP	10K	5%	1/16W
R365	1-216-001-00	METAL CHIP	10	5%	1/10W
R366	1-216-809-11	METAL CHIP	100	5%	1/16W
R371	1-216-821-11	METAL CHIP	1K	5%	1/16W
R372	1-216-854-11	METAL CHIP	560K	5%	1/16W
R373	1-216-833-11	METAL CHIP	10K	5%	1/16W
R374	1-216-827-11	METAL CHIP	3.3K	5%	1/16W
R375	1-216-857-11	METAL CHIP	1M	5%	1/16W
R376	1-216-833-11	METAL CHIP	10K	5%	1/16W
R377	1-216-821-11	METAL CHIP	1K	5%	1/16W
R378	1-216-809-11	METAL CHIP	100	5%	1/16W
R379	1-216-834-11	METAL CHIP	12K	5%	1/16W
R380	1-216-848-11	METAL CHIP	180K	5%	1/16W
R381	1-216-830-11	METAL CHIP	5.6K	5%	1/16W
R382	1-216-834-11	METAL CHIP	12K	5%	1/16W
R383	1-216-821-11	METAL CHIP	1K	5%	1/16W
R384	1-216-848-11	METAL CHIP	180K	5%	1/16W
R385	1-218-851-11	METAL CHIP	1.5K	0.50%	1/16W
R386	1-218-732-11	METAL CHIP	47K	0.50%	1/16W
R387	1-218-732-11	METAL CHIP	47K	0.50%	1/16W
R389	1-218-732-11	METAL CHIP	47K	0.50%	1/16W
R390	1-218-732-11	METAL CHIP	47K	0.50%	1/16W
R392-395	1-216-833-11	METAL CHIP	10K	5%	1/16W
R396	1-218-710-11	METAL CHIP	5.6K	0.50%	1/16W
R397	1-216-839-11	METAL CHIP	33K	5%	1/16W
R398	1-216-809-11	METAL CHIP	100	5%	1/16W
R399	1-216-809-11	METAL CHIP	100	5%	1/16W
R400	1-216-849-11	METAL CHIP	220K	5%	1/16W
R401	1-216-809-11	METAL CHIP	100	5%	1/16W
R402	1-216-809-11	METAL CHIP	100	5%	1/16W
R410	1-216-845-11	METAL CHIP	100K	5%	1/16W
R501	1-216-794-11	METAL CHIP	5.6	5%	1/16W
R502	1-216-828-11	METAL CHIP	3.9K	5%	1/16W
R503	1-216-813-11	METAL CHIP	220	5%	1/16W
R504	1-216-830-11	METAL CHIP	5.6K	5%	1/16W
R505	1-216-794-11	METAL CHIP	5.6	5%	1/16W
R506	1-216-794-11	METAL CHIP	5.6	5%	1/16W
R508	1-216-843-11	METAL CHIP	68K	5%	1/16W
R509	1-216-811-11	METAL CHIP	150	5%	1/16W
R510	1-216-843-11	METAL CHIP	68K	5%	1/16W
R511	1-216-840-11	METAL CHIP	39K	5%	1/16W
R512-514	1-216-834-11	METAL CHIP	12K	5%	1/16W
R516	1-216-023-00	METAL CHIP	82	5%	1/10W
R517	1-216-813-11	METAL CHIP	220	5%	1/16W
R518	1-217-806-11	METAL GLAZE	1	5%	1/8W
R519	1-217-806-11	METAL GLAZE	1	5%	1/8W
R520	1-216-841-11	METAL CHIP	47K	5%	1/16W
R521	1-216-833-11	METAL CHIP	10K	5%	1/16W
R522	1-216-833-11	METAL CHIP	10K	5%	1/16W
R523	1-216-832-11	METAL CHIP	8.2K	5%	1/16W
R524	1-216-828-11	METAL CHIP	3.9K	5%	1/16W
R525	1-216-844-11	METAL CHIP	82K	5%	1/16W
R526	1-216-843-11	METAL CHIP	68K	5%	1/16W
R527	1-216-829-11	METAL CHIP	4.7K	5%	1/16W
R528	1-216-826-11	METAL CHIP	2.7K	5%	1/16W
R529	1-218-889-11	METAL CHIP	56K	0.50%	1/16W
R530	1-216-826-11	METAL CHIP	2.7K	5%	1/16W
R531	1-216-825-11	METAL CHIP	2.2K	5%	1/16W
R533	1-218-748-11	METAL CHIP	220K	0.50%	1/16W

MAIN TRANSFORMER

Ref. No.	Part No.	Description			Remark
R534	1-218-748-11	METAL CHIP	220K	0.50%	1/16W
R535-539					
	1-216-837-11	METAL CHIP	22K	5%	1/16W
R540-542					
	1-216-845-11	METAL CHIP	100K	5%	1/16W
R544	1-216-833-11	METAL CHIP	10K	5%	1/16W
R545	1-216-801-11	METAL CHIP	22	5%	1/16W
R546	1-216-833-11	METAL CHIP	10K	5%	1/16W
R547	1-216-829-11	METAL CHIP	4.7K	5%	1/16W
R548	1-216-829-11	METAL CHIP	4.7K	5%	1/16W
R549	1-216-833-11	METAL CHIP	10K	5%	1/16W
R550	1-216-174-00	METAL GLAZE	100	5%	1/8W
R551	1-216-839-11	METAL CHIP	33K	5%	1/16W
R552	1-216-834-11	METAL CHIP	12K	5%	1/16W
R553	1-218-684-11	METAL CHIP	470	0.50%	1/16W
R554	1-216-839-11	METAL CHIP	33K	5%	1/16W
R555	1-216-811-11	METAL CHIP	150	5%	1/16W
R556	1-216-818-11	METAL CHIP	560	5%	1/16W
R557	1-216-818-11	METAL CHIP	560	5%	1/16W
R558	1-218-676-11	METAL CHIP	220	0.50%	1/16W
R559	1-218-740-11	METAL CHIP	100K	0.50%	1/16W
R560	1-216-817-11	METAL CHIP	470	5%	1/16W
R561	1-216-817-11	METAL CHIP	470	5%	1/16W
R564	1-216-864-11	METAL CHIP	0	5%	1/16W
R565	1-216-843-11	METAL CHIP	68K	5%	1/16W
R566	1-216-817-11	METAL CHIP	470	5%	1/16W
R567	1-216-837-11	METAL CHIP	22K	5%	1/16W
R568	1-216-809-11	METAL CHIP	100	5%	1/16W
R569	1-216-841-11	METAL CHIP	47K	5%	1/16W
R570-572					
	1-216-809-11	METAL CHIP	100	5%	1/16W
R573	1-216-841-11	METAL CHIP	47K	5%	1/16W
R574	1-216-817-11	METAL CHIP	470	5%	1/16W
R575	1-216-845-11	METAL CHIP	100K	5%	1/16W
R577	1-216-845-11	METAL CHIP	100K	5%	1/16W
R578	1-216-842-11	METAL CHIP	56K	5%	1/16W
R579	1-216-838-11	METAL CHIP	27K	5%	1/16W
R580	1-216-838-11	METAL CHIP	27K	5%	1/16W
R581	1-216-835-11	METAL CHIP	15K	5%	1/16W
R582	1-216-794-11	METAL CHIP	5.6	5%	1/16W
R583	1-216-825-11	METAL CHIP	2.2K	5%	1/16W
R584	1-216-825-11	METAL CHIP	2.2K	5%	1/16W
R585	1-218-873-11	METAL CHIP	12K	0.50%	1/16W
R586	1-218-732-11	METAL CHIP	47K	0.50%	1/16W
R587	1-216-829-11	METAL CHIP	4.7K	5%	1/16W
R588	1-216-819-11	METAL CHIP	680	5%	1/16W
R589	1-216-849-11	METAL CHIP	220K	5%	1/16W
R590	1-216-849-11	METAL CHIP	220K	5%	1/16W
R592	1-216-843-11	METAL CHIP	68K	5%	1/16W
R593	1-216-843-11	METAL CHIP	68K	5%	1/16W
R596-598					
	1-216-845-11	METAL CHIP	100K	5%	1/16W
R599	1-216-854-11	METAL CHIP	560K	5%	1/16W
R600	1-216-829-11	METAL CHIP	4.7K	5%	1/16W
R601	1-216-833-11	METAL CHIP	10K	5%	1/16W
R602	1-216-812-11	METAL CHIP	180	5%	1/16W
R608	1-216-816-11	METAL CHIP	390	5%	1/16W
R609	1-216-849-11	METAL CHIP	220K	5%	1/16W
R610	1-216-838-11	METAL CHIP	27K	5%	1/16W
R611	1-216-833-11	METAL CHIP	10K	5%	1/16W
R614	1-216-841-11	METAL CHIP	47K	5%	1/16W
R2001	1-216-845-11	METAL CHIP	100K	5%	1/16W
R2002	1-216-854-11	METAL CHIP	560K	5%	1/16W
R2003	1-216-845-11	METAL CHIP	100K	5%	1/16W
R2004	1-216-851-11	METAL CHIP	330K	5%	1/16W
R2005	1-216-844-11	METAL CHIP	82K	5%	1/16W
R3001	1-216-837-11	METAL CHIP	22K	5%	1/16W
R3002	1-216-841-11	METAL CHIP	47K	5%	1/16W
R3003	1-216-821-11	METAL CHIP	1K	5%	1/16W

< VARIABLE RESISTOR >

RV301	1-223-361-11	RES, VAR, CARBON 20K/20K (REC LEVEL)
RV501	1-238-667-21	RES, ADJ, CERMET 100K

< SWITCH >

S301	1-571-277-11	SWITCH, SLIDE (MIC SENS)
S302	1-692-605-11	SWITCH, SLIDE (REC MODE)
S501	1-571-506-41	SWITCH, SLIDE (SP/LP)

< VIBRATOR >

X501	1-579-924-11	VIBRATOR, CRYSTAL (CHIP TYPE) (9.408MHz)
X502	1-579-924-11	VIBRATOR, CRYSTAL (CHIP TYPE) (9.408MHz)
X503	1-579-923-11	VIBRATOR, CRYSTAL (CHIP TYPE) (22.5792MHz)
X504	1-579-922-11	VIBRATOR, CRYSTAL (CHIP TYPE) (24.576MHz)

****

TRANSFORMER BOARD
(SUPPLIED WITH MAIN BOARD, COMPLETE)
****

< CAPACITOR >

C589	1-162-967-11	CERAMIC CHIP	0.0033uF	10%	50V
C590	1-164-234-11	CERAMIC CHIP	1uF		10V
C612	1-125-507-11	CAPACITOR	0.22F		5.5V
C901	1-163-986-00	CERAMIC CHIP	0.027uF	10%	25V

Ref. No.	Part No.	Description	Remark
		< TRANSFORMER >	
IVT501	1-423-601-11	TRANSFORMER, OSCILLATION	
		< TRANSISTOR >	
Q513	8-729-120-28	TRANSISTOR 2SC1623-L5L6	
		< RESISTOR >	
R562	1-216-821-11	METAL CHIP 1K 5% 1/16W	
R563	1-218-736-11	METAL CHIP 68K 0.50% 1/16W	

****

MISCELLANEOUS
****

6	1-467-043-21	SYSTEM CONTROL BOARD UNIT	
25	1-467-044-11	SWITCH UNIT (BLOCK TYPE)	
104	X-4943-984-1	DRUM ASSY (INCLUDING RF MODULE)	
130	8-835-495-01	MOTOR, DC SCR-0201A	
D1001	8-719-988-42	LED GL453S	
M1001	1-698-104-11	MOTOR (WITH GEAR)	
PM1001	1-454-602-11	SOLENOID, PLUNGER	
Q1001	8-729-925-30	PHOTO TRANSISTOR PT4810FJ	
Q1002	8-729-925-30	PHOTO TRANSISTOR PT4810FJ	
S1001	1-571-878-11	SWITCH, PUSH (2 KEY) (CASSETTE DET/REC PROOF)	
S1002	1-572-288-11	SWITCH, PUSH (AC POWER) (1 KEY) (CASSETTE COMPARTMENT LOCK)	

****

Ref. No.	Part No.	Description	Remark
		ACCESSORIES & PACKING MATERIALS	
		**********	
⚠	1-467-064-11	ADAPTOR, AC (AC-E60AM) (JE)	
⚠	1-467-570-31	ADAPTOR, AC (AC-E60HG) (AEP, G)	
⚠	1-467-906-11	ADAPTOR, AC (AC-E60HG) (US, Canadian)	
⚠	1-569-007-11	ADAPTOR, CONVERSION 2P (JE)	
	1-590-264-11	CABLE, OPTICAL DIGITAL (AEP, G)	
	3-388-826-01	CASE, CARRYING	
	3-756-789-01	MANUAL, INSTRUCTION (JAPANESE, ENGLISH) (JE)	
	3-756-789-11	MANUAL, INSTRUCTION (ENGLISH, FRENCH, GERMAN, SPANISH, DUTCH, SWEDISH, PORTUGUESE, ITALIAN) (JE)	
	3-810-253-01	MANUAL, INSTRUCTION (JAPANESE) (JE)	
	3-810-253-11	MANUAL, INSTRUCTION (ENGLISH, FRENCH)	
	3-810-253-21	MANUAL, INSTRUCTION (GERMAN, SPANISH) (AEP, G, UK, E, JE)	
	3-810-253-31	MANUAL, INSTRUCTION (ITALIAN, DUTCH) (AEP, G, UK, E)	
	3-810-253-41	MANUAL, INSTRUCTION (SWEDISH, PORTUGUESE) (AEP, G, UK, E)	
	3-810-253-51	MANUAL, INSTRUCTION (KOREAN) (JE)	
*	4-979-703-01	INDIVIDUAL CARTON (UK, E)	
*	4-979-705-01	INDIVIDUAL CARTON (AEP, G)	
*	4-979-709-01	INDIVIDUAL CARTON (US, Canadian)	
*	4-979-712-01	INDIVIDUAL CARTON (JE)	

The components identified by mark ⚠ or dotted line with mark. ⚠ are critical for safety. Replace only with part number specified.	Les composants identifiés par une marque ⚠ sont critiques pour la sécurité. Ne les remplacer que par une pièce portant le numéro spécifié.

REVISION HISTORY

Clicking the version allows you to jump to the revised page.
Also, clicking the version at the upper on the revised page allows you to jump to the next revised page.

Ver.	Date	Description of Revision
1.1	2001. 06	Change of Part No. for CASE ASSY, BATTERY (Including Correction-1) (ECN-DA800263)
1.0	1995. 10	New